IS 14697 (1999): ac Static Transformer Operated Watthour and Var-hour Meters, Class 0.2 S and 0.5 S [ETD 13: Equipment for Electrical Energy Measurement and Load Control]

BLANK PAGE

भारतीय मानक

ए सी स्थैतिक ट्रांसफार्मर चालित वाट घंटे एवं ए आर-घंटे मीटर, वर्ग 0.2 S तथा 0.5 S — विशिष्टि

Indian Standard

ac STATIC TRANSFORMER OPERATED WATTHOUR AND VAR-HOUR METERS, CLASS 0.2 S AND 0.5 S — SPECIFICATION

ICS 91.140.50

BUREAU OF INDIAN STANDARDS
MANAK BHAVAN, 9 BAHADUR SHAH ZAFAR MARG
NEW DELHI 110002

October 1999 **Price Group 10**

Equipment for Electrical Energy Measurement and Load Control Sectional Committee, ETD 13

FOREWORD

This Indian Standard was adopted by the Bureau of Indian Standards, after the draft finalized by the Equipment for Electrical Energy Measurement and Load Control Sectional Committee had been approved by the Electrotechnical Division Council.

Static electrical watthour meters permit the highest attainable accuracy of energy measurements and are employed for the accurate measurement of large amount of energy.

The best possible accuracy is achieved by the class 0.2 S but electronic techniques available also allow smaller errors and deviations under influence quantities for class 0.5 S meters than which are permitted for induction meters of same accuracy classes.

The Indian Standard IS 13779 : 1993 'ac static watthour metric, class 1 and 2 — Specification' was adopted to cover general requirements and tests for various types of static watt hour meters of class 1 and 2, generally in line with the requirements for induction meters. However, this standard specifies the general requirements and tests applicable to transformer operated static watthour and Var-hour meters of class 0.2 S and 0.5 S keeping in view of performance levels attainable in such meters.

The letter 'S' denotes special measuring range designated for transformer operated applications, generally for large power measurements. Current transformers also 'S' designated as per IS 2705 (Part 2): 1992 'Current transformers: Part 2 Measuring current transformers (*second revision*)' have measuring ranges comparable to those of static meters covered by this standard. For the sake of overall accuracy throughout the measuring range, static meters covered by this standard should preferably be connected with 'S' designated current transformers. For example class 0.5 S meter is used with 0.2 S CT and class 0.2 S meter is used with 0.2 S CT.

The test levels as specified in this standard are regarded as minimum values to guarantee the proper function of the meter under normal working conditions. For special applications other test levels might be necessary and have to be fixed between the user and the manufacturer. For tests and test criteria existing tests and test levels have been taken from IS 13010 : 1990 'ac watthour meters class 0.5, 1 and 2 — Specification' and IS 13779 : 1993. New tests have been added in respect of electromagnetic compatibility (EMC) and interference (EMI) for which relevant part and section of IEC 61000 series may be referred. The following IEC publication have also been referred in this standard:

i) IEC 60068-2-75 (1997) Environmental testing — Part 2-75 : Tests—Test Eh : Hammer tests

ii) ISO 75-1 (1993) Determination of temperature of deflection under load — Part 1 : General test method

iii) ISO 75-2 (1993) Determination of temperature of deflection under load — Part 2 : Plastics and ebonite

The reliability of static meters depends on their electronic components and interconnections and is always in the process of upgradation. This aspect is not covered in this standard as there are no short time test procedures available which would fit in the type test document to substantially check this requirement. Also, influence of various harmonics and suitable test procedures to determine such influences, require detailed consideration for specifying such requirement.

While preparing this standard assistance has been mainly derived from the following publications:

IEC 60687 (1992-06) 'Alternating current static watthour meters for active energy (class 0.2 S and 0.5 S)', issued by the International Electrical Commission.

(*Continued on third cover*)

Indian Standard

ac STATIC TRANSFORMER OPERATED WATTHOUR AND VAR-HOUR METERS, CLASS 0.2 S AND 0.5 S — SPECIFICATION

1 SCOPE

1.1 This standard specifies static watthour meters of accuracy class 0.2 S and 0.5 S for the measurement of alternating-current electrical active energy of frequency in the range of 45 Hz to 55 Hz for single phase and three phase balanced and unbalanced loads. It applies to their type tests, routine tests and acceptance tests.

1.2 It applies only to transformer operated static watthour meters consisting of measuring element(s) and register(s) enclosed together in the meter case. It also applies to operation indicator(s) and test output(s). It also applies to multirate tariff meters and meters which measure energy in both directions.

1.3 Some versions of static reactive energy (Var-hour) meters may deemed to be covered by this standard as if these are active energy (Watthour) meters of appropriate accuracy class with necessary adjustment to power factor. Although it is possible to achieve class 0.2 S accuracy in static Var-hour meters, it is of general opinion that accuracy attainable for Var-hour measurement is one level inferior to that in the case of kWh measurement with identical design of measuring elements. Therefore, it is possible for this standard to cover static Var-hour meter, class 0.2 S, and 0.5 S for reactive energy measurement in all transformer operated applications. Only 'power factor' wherever it has appeared in this standard, shall be read as 'sin ϕ inductive' or 'sin ϕ capacitive' where ϕ is respectively the lagging or the leading power factor angle.

1.4 It does not apply to :

a) Watthour and Var-hour meters, where the voltage across the connection terminal exceeds 600 V (line to line voltage for meters for polyphase systems);

b) Portable meters and outdoor meters;

c) Elements enclosed in the meter case such as impulse device, time-switches, remote control elements, maximum demand indicator, etc (it applies to metering elements only vide 1.2); and

d) Data interfaces to the register of the meters.

1.5 For rack-mounted meters, the mechanical properties are not covered in this standard.

2 REFERENCES

The Indian Standards listed in Annex A are necessary adjuncts to this standard.

3 TERMINOLOGY

3.1 For the purpose of this standard, the following definitions shall apply.

3.1.1 *General*

3.1.2 *Watthour Meter (Active Energy Meter)*

An instrument which measures and registers active energy in watthours or in suitable multiples thereof, by integrating active power with respect to time.

3.1.3 *Static Watthour Meter*

A watthour meter in which current and voltage act on solid state (electronic) elements to produce an output proportional to watthours.

3.1.4 *Reactive Power (Var)*

Reactive power for sinusoidal waveforms of any single frequency in a single phase circuit is defined as the product of the r.m.s. values of current and voltage and the sine of the phase angle between them.

NOTE — For practical reason this standard applies to the reactive power for sinusoidal current and voltage containing the fundamental frequency only.

3.1.5 *Reactive Energy (Var- hour)*

3.1.5.1 *Reactive energy in a single phase circuit*

The value of the reactive power as defined under **3.1.4** integrated with respect to time.

3.1.5.2 *Reactive energy in a polyphase circuit*

The algebraic sum of the reactive energies of the phases.

NOTE — As this standard is based on reactive energy derived from the sinusoidal current and voltage of fundamental frequencies, the inductive or capacitive state of a circuit in this recommendation is given by the factor 'sin ϕ'.

3.1.6 *Var-hour Meter*

An instrument which measures and registers reactive energy in Var-hours or in suitable multiples

there of, by integrating reactive power with respect to time.

3.1.7 *Static Var-hour Meter*

A Var-hour meter in which current and voltage act on solid state (electronic) elements to produce an output proportional to Var-hours.

3.1.8 *Direction and Sign of Reactive Power (see Annex F)*

3.1.9 *Multi-Rate Meter*

An energy meter provided with a number of registers, each operative at specified time intervals corresponding to different tariffs.

3.1.10 *Meter Type*

Designation used for defining a particular design of meter manufactured by one manufacturer, having:

a) Similar metrological properties;
b) The same principle of operation and uniform construction of parts determining these properties; and
c) The same ratio of the rated maximum current to the basic current.

The type may have several values of basic current and several values of reference voltage.

These meters are designated by the manufacturer by one or more groups of letters or numbers or a combination of letters and numbers. Each type has one designation only.

NOTE — The type is represented by the sample meter(s) intended for the type tests and whose characteristics (basic current and reference voltage) are chosen from the values proposed by the manufacturer.

3.2 Terms Related to Functional Elements

3.2.1 *Measuring Element*

Part of the meter which produces an output proportional to the energy.

3.2.2 *Output Devices*

3.2.2.1 *Test output*

A device at which output from the measuring element is available for testing of the meter . The output may be in the form of the pulses or high resolution register.

3.2.2.2 *Operation indicator*

A device which gives a visible signal of the operation of the meter . The test output may also act as operation indicator.

3.2.3 *Memory*

An element which stores digital information in a structured manner for subsequent retrieval whenever addressed.

3.2.4 *Non Volatile Memory (NVM)*

A memory which can retain stored information in the absence of power.

NOTE — Memory chip with internal battery needing no replacement during the life time of meter may be considered as non volatile memory, but memory with external battery shall not be considered as NVM.

3.2.5 *Display*

A device which visibly displays the contents of (a) memory(ies).

3.2.6 *Register*

A device comprising both memory and display which stores and displays information. A single display may be used with multiple electronic memories to form multiple registers.

3.2.7 *Current Circuit*

The internal connections of the meter and part of the measuring element through which flows the current of the circuit to which the meter is connected.

3.2.8 *Voltage Circuit*

The internal connections of the meter, part of the measuring element and power supply to the meter, supplied from the voltage of the circuit to which the meter is connected.

3.2.9 *Auxiliary Circuit*

The elements (lamps, contacts, etc) and connections of an auxiliary device within the meter case intended to be connected to an external device, for example, clock, relay, impulse counter.

3.2.10 *Meter Constant*

Constant expressing the relation between the energy registered by the meter and the corresponding pulse count of the test output. This is generally expressed either as pulse count per Watthour or pulse count per kilo Watthour (imp/kWh) or Watthour per pulse (Wh/imp). This definition is not applicable for meters having high resolution registers.

For reactive energy, Watthour (Wh) shall be read as Var-hour (Varh).

3.3 Terms Related to Mechanical Elements

3.3.1 *Indoor Meter*

A meter which can only be used in areas which have additional protection against environmental influences (inhouse, enclosures and cabinets).

3.3.2 *Outdoor Meter*

A meter which can be used without additional protection in an exposed outdoor environment.

3.3.3 *Meter Base*

The back of the meter by which it is generally fixed and to which are attached the measuring element, the terminals or the terminal block, and the cover. For a flush-mounted meter, the meter base may include the sides of the case.

3.3.4 *Meter Cover*

The enclosure on the front of the meter, made either wholly of transparent material or opaque material provided with windows(s) through which the operation indicator (if fitted) and the display can be read.

3.3.5 *Meter Case*

This comprises the base and the cover.

3.3.6 *Accessible Conducting Part*

A conducting part which can be touched by the standard test finger, when the meter is installed ready for use (*see* IS 1401).

3.3.7 *Protective Earth Terminal*

The terminal connected to accessible conducting parts of a meter, for safety purposes.

3.3.8 *Terminal Block*

A support made of insulating material on which all or some of the terminals of the meter are grouped together.

3.3.9 *Terminal Cover*

A cover which covers the meter terminals and generally the ends of the external wires or cables connected to the terminals.

3.3.10 *Clearance*

The shortest distance measured in air between two conductive parts.

3.3.11 *Creepage Distance*

The shortest distance measured over the surface of insulation between two conductive parts.

3.4 Terms Related to Insulation

3.4.1 *Basic Insulation*

The insulation applied to live parts to provide basic protection against electric shock.

NOTE — Basic insulation does not necessarily include insulation used exclusively for functional purposes.

3.4.2 *Supplementary Insulation*

An independent insulation applied in addition to the basic insulation, in order to provide protection against electric shock in the event of a failure of the basic insulation.

3.4.3 *Double Insulation*

An insulation comprising both, basic insulation and supplementary insulation.

3.4.4 *Reinforced Insulation*

A single insulation system applied to live parts, which provides a degree of protection against electric shock equivalent to double insulation.

NOTE — The term 'insulation system' does not imply that the insulation must be one homogenous piece. It may comprise several layers which can not be tested singly as supplementary or basic insulation.

3.4.5 *Insulating Encased Meter*

A meter with case of insulating material in which protection against electric shock does not rely on basic insulation only, but in which additional safety precautions, such as double insulation or reinforced insulation, are provided. There being no provision for protective earthing or reliance upon installation conditions.

3.5 Terms Related to Meter Quantities

3.5.1 *Basic Current (I_b)*

The value of current in accordance with which the relevant performance of the meter is fixed.

3.5.2 *Rated Maximum Current (I_{Max})*

The highest value of current at which the meter purports to meet the accuracy requirements of this standard, when this current passes continuously in the meter.

3.5.3 *Reference Voltage*

The value of voltage in accordance with which the relevant performance of the meter is fixed.

3.5.4 *Reference Frequency*

The value of frequency is accordance with which the relevant performance of the meter is fixed.

3.5.5 *Class Index*

A number which gives the limits of the permissible percentage error, for all values of current between 0.05 I_b and I_{Max} for unity power factor (and in the case of polyphase meters with balanced loads) when the meter is tested under reference conditions (including permitted tolerances on the reference values) as defined in this standard.

3.5.6 *Percentage Error*

The percentage error is given by the following formula:

$$\text{Percentage error} = \frac{(\text{Energy registerd by the meter}) - (\text{True energy})}{\text{True energy}} \times 100$$

NOTES

1 Energy means Active energy (kWh) for Watthour meter and Reactive energy (kVarh) for Var-hour meter.

2 True value for reactive energy is determined at fundamental frequency.

3 Since the true value cannot be determined, it is approximated by a value with a stated uncertainty that can be traced to national standards or standards agreed upon between manufacturer and user.

3.5.7 *Repeatability of Error*

Repeatability of error is the degree of closeness of agreement between results of successive error tests carried out under identical conditions, arising out of factors other than measurement uncertainties.

It is generally measured by standard deviation of sufficiently large number of test data. It may also be measured by dispersion of such data under limited condition when sufficiently large data is not available.

3.6 Terms Related to Influence Quantities

3.6.1 *Influence Quantity or Influence Factor*

Any quantity, generally external to the meter, which may affect its working performance.

3.6.2 *Reference Conditions*

The appropriate set of influence quantities and performance characteristics with reference values, their tolerances and reference ranges, with respect to which the intrinsic error is specified.

3.6.3 *Variation of Error Due to an Influence Quantity*

The difference between the percentage error of the meter when only one influence quantity assumes successively two specified values, one of them being the reference value.

3.6.4 *Distortion Factor*

The ratio of the r.m.s. value of the harmonic content (obtained by subtracting from a non-sinusoidal alternating quantity, its fundamental component) to the r.m.s. value of the non-sinusoidal quantity. The distortion factor is usually expressed in percentage.

3.6.5 *Electromagnetic Disturbance*

Conducted or radiated electromagnetic effects which may interfere functionally or metrologically with the operation of the meter.

3.6.6 *Reference Temperature*

The ambient temperature specified for reference conditions.

3.6.6.1 *Mean temperature coefficient*

The ratio of the variation of the percentage error to the change of temperature which produces this variation, specified normally at the reference temperature.

3.6.7 *Operating Conditions*

A set of specified measuring ranges for performance characteristics and specified operating ranges for influence quantities, within which the variations in percentage errors of a meter are specified and determined.

3.6.8 *Specified Measuring Range*

The set of values of a measured quantity for which the percentage errors of a meter is intended to lie within specified limits.

3.6.9 *Specified Operating Range*

A range of values of a single influence quantity which forms a part of the operating conditions.

3.6.10 *Limit Range of Operation (Limiting Conditions)*

The extreme conditions which an operating meter can withstand without damage and without degradation of its metrological characteristics when it is subsequently operated under its operating conditions.

3.6.11 *Storage and Transport Conditions*

The extreme conditions which a non-operating meter can withstand without damage and without degradation of its metrological characteristics when it is subsequently operated under its operating conditions.

3.6.12 *Normal Working Position*

The position of the meter defined by the manufacturer for normal service.

3.6.13 *Thermal Stability*

Thermal stability is considered to be reached when the change in error as consequence of thermal effects during 20 minutes is less than 0.1 times the maximum permissible error for the measurement under consideration.

3.7 Terms Related to Tests

3.7.1 *Type Tests*

Series of tests carried out on one meter or a small number of meters of the same type having identical characteristics, selected by manufacturer to prove conformity with all the requirements of this standard for the relevant class of meter. These are intended to prove the general qualities and design of a given type of meter.

3.7.2 *Routine Tests*

Tests carried out on each meter to check conformity with the requirements of this standard in aspects which are likely to vary during production.

3.7.3 *Acceptance Test*

Tests carried out on samples taken from a lot for the purpose of acceptance of the lot.

4 CLASSIFICATION

4.1 Meters are classified according to their respective class indices, for example, 0.2 S or 0.5 S.

5 RATINGS

5.1 Standard Reference Voltages

The reference voltage shall be one of the values as given in Table 1 (*see* IS 12360).

Table 1 Standard Reference Voltages

Meters for	Standard Reference Voltage (V)	Exceptional Values (V)
Connection through voltage transformer	57.7 (100), 63.5 (110)	100 (173)
Connection through current transformer only	230 (400), 240 (415)	220 (380), 250 (433)

5.2 Standard Basic Currents

The basic currents shall be 1 A or 5 A.

5.3 Rated Maximum Current

The rated maximum currents shall be 1.2 times of basic current

NOTE — For requirements other than 1.2 times basic currents should be the subject of purchase contract.

5.4 Standard Frequency

Standard value for reference frequency is 50 Hz.

6 GENERAL AND CONSTRUCTIONAL REQUIREMENTS

6.1 General

Meters shall be designed and constructed in such a way as to avoid introducing any danger in normal use and under normal conditions, so as to ensure especially :

Personal safety against electric shock.

Personal safety against effects of excessive temperature.

Safety against spread of fire.

Protection against solid objects, dust and water.

All parts which are subject to corrosion under normal conditions shall be effectively protected. Any protective coating shall not be liable to damage by ordinary handling nor damage due to exposure to air, used under normal working conditions.

NOTE — For meters for special use in corrosive atmosphere, additional requirements shall be fixed in the purchase contract (for example, salt mist test).

6.2 Meter Case

The meters shall have a case which can be sealed in such a way that the internal parts of the meter are accessible only after breaking the seal(s).

The cover shall not be removable without the use of a tool.

The case shall be so constructed and arranged that any non-permanent deformation cannot prevent the satisfactory operation of the meter.

Unless otherwise specified, the meters having a case wholly or partially made of metal, shall be provided with a protective earth terminal.

6.3 Window

If the cover is not transparent one or more windows shall be provided for reading the displays and observation of the operation indicator if fitted. These windows shall be covered by toughened transparent material which cannot be removed undamaged without breaking the seal(s).

6.4 Terminals, Terminals Block(s) and Protective Earth Terminal

Terminal may be grouped in a terminal block(s) having adequate insulating properties and mechanical strength. In order to satisfy such requirements, when choosing insulating materials for the terminal block(s), adequate testing of materials should be taken into account.

The terminal block, the terminal cover (if not of metal) and the case (if not of metal) shall be of a material which complies with the requirements of IS 11731 (Part 1) method FH 1. The holes in the insulation material which from an extension of the terminal holes shall be of sufficient size to accommodate also the insulation of the conductors.

The material of which the terminal block is made shall be capable of passing the tests given in ISO 75-1(1993) and ISO 75-2 (1993) for a temperature of 135°C and a pressure of 1.8 MPa (Method A).

The manner of fixing the conductors to the terminals shall ensure adequate and durable contact such that there is no risk of loosening or undue heating. Screw connec-

tions transmitting contact force and screw fixings which may be loosened and tightened several times during the life of the meter, shall screw into metal nuts.

All parts of every terminal shall be such that the risk of corrosion resulting from contact with any other metal part is minimized.

Electrical connections shall be so designed that contact pressure is not transmitted through insulating material of the terminal block.

For current circuits, the voltage is considered to be the same as for the related voltage circuit.

Terminals with different potentials which are grouped close together shall be protected against accidental short circuiting. Protection may be obtained by insulating barriers. Terminals of one current circuit are considered to be at the same potential.

The terminals, the conductor fixing screws, or the external or internal conductors shall not be liable to come into contact with terminal covers (if made of metal).

The protective earth terminal, if any:

a) Shall be electrically bonded to the accessible metal parts;
b) Should, if possible, form part of the meter base;
c) Should preferably be located adjacent to its terminal block;
d) Shall accommodate a conductor having a cross-section at least equivalent to the main current conductors but with a lower limit of 6 mm^2 and an upper limit of 16 mm^2; and
e) Shall be clearly identified by earthing symbol.

After installation, it shall not be possible to loosen the protective earth terminal without the use of a tool.

6.5 Terminal Cover(s)

Every terminal block shall be provided with a terminal cover conforming to **6.5.1** or **6.5.2**.

6.5.1 *Short Terminal Cover*

The terminals, their fixing screws, and the insulated compartment housing them shall be enclosed by a cover with a provision for sealing. The cover may be of the same size as that of the terminal block. The wiring with this type of cover may be carried out from the front of the meter board.

6.5.2 *Extended Terminal Cover*

The terminals, their fixing screws, a suitable length of external insulated conductor and its insulation shall be enclosed by a cover with a provision for sealing. The wiring with this type of cover shall be carried out from the rear of the meter board.

The fixing screws used on the terminal cover for fixing and sealing in **6.5.1** and **6.5.2** shall be held captive in the terminal cover.

When the meter is mounted on the meter board, no access to the terminals shall be possible without breaking seal(s) of the terminal cover.

6.6 Clearance and Creepage Distance

The clearances and creepage distances of the terminal block and those between the terminals and the surrounding parts of the metal enclosure shall be not less than the value specified in Table 2.

The clearance between the terminal cover, if made of metal, and the upper surface of the screws when screwed down to the maximum applicable conductor fitted shall be not less than the relevant values indicated in Table 2.

Table 2 Clearances and Creepage Distance

Voltage Phase-to-Earth Derived from Rated System Voltages (V)	Minimum Clearances (mm)	Minimum Creepage Distance (mm)
(1)	(2)	(3)
Not exceeding 50	0.8	1.2
Not exceeding 100	0.8	1.4
Not exceeding 150	1.5	1.6
Not exceeding 300	3.0	3.2
Not exceeding 600	5.5	6.3

The requirements of the impulse voltage test shall also be met (*see* **12.7.6.2**).

6.7 Insulating Encased Meter

A meter having a durable and substantially continuous enclosure made wholly of insulating material, including the terminal cover, which envelops all metal parts with the exception of small parts, for example, name-plate screws, suspensions and rivets. If such small parts are accessible by the standard test finger (as specified in IS 1401) from outside the case, then they shall be additionally isolated from live parts by supplementary insulation against failure of basic insulation or loosening of live parts. The insulating properties of lacquer, enamel, ordinary paper, cotton, oxide film on metal parts, adhesive film and sealing compound, or similar unsure materials, shall not be regarded as sufficient for supplementary insulation.

For the terminal block and the terminal cover of such a meter, reinforced insulation is sufficient.

6.8 Resistance to Heat and Fire

The terminal block, the terminal cover and the meter case shall ensure reasonable safety against spread of fire. They should not be ignited by thermic overload of live parts in contact with them. To comply therewith it must fulfil the tests as specified in **12.4**.

6.9 Protection Against Penetration of Dust and Water

The meter shall conform to the degree of protection as given below:

IP 51, but without suction in the meter.

6.10 Display of Measured Values

The information can be shown either with an electromechanical register or an electronic display. In case of an electronic display the corresponding non-volatile memory shall have a minimum retention time of 5 years.

NOTE — Longer retention time of the non-volatile memory should be the subject of purchase contract.

In the case of multiple values presented by a single display it must be possible to display the contents of all relevant memories. When displaying the memory, identification of each tariff/parameter shall be available.

The current tariff shall be indicated. When the meter is not energized; the electronic display need not be visible.

The principal unit for the measured values shall be kilowatt-hour (kWh) or the Megawatt hour (MWh), kVarh or MVarh.

The register shall be able to record and display starting from zero, for a minimum of 1 500 h, the energy corresponding to rated maximum current at reference voltage and unity power-factor. Register should not rollover in between this duration.

NOTE — Values higher than 1 500 h should be the subject of purchase contract.

6.11 Output Device

The meter shall have a test output accessible from the front and be capable of being monitored with suitable testing equipment. The operation indicator, if fitted, must be visible from the front.

Since the sequence of test output pulses may not be homogeneous, the manufacturer shall state the minimum number of pulse counts necessary to ensure measurement accuracy at least 1/10th of the specified error limits at various points and consistent with desired resolution.

The resolution of the test output in the form of pulses or high resolution register, whether accessible on the meter or through external display, shall be sufficient to conduct satisfactorily accuracy test at the lowest load in less than 5 minutes and starting current test in less than 10 minutes.

7 MARKING OF METERS

7.1 Name Plate

Every meter shall bear the following information if applicable :

a) Manufacturer's name or trade-mark and if required, the place of manufacture.

b) Designation of type (*see* **3.1.10**) and if required, space for approval mark.

c) The number of phases and the number of wires for which the meter is suitable (for example, single-phase 2-wire, three-phase 3-wire, three-phase 4-wire). These markings may be replaced by the graphical symbols (as per IS 12032 series).

d) The serial number and year of manufacture. If the serial number is marked on a plate fixed to the cover, the number is to be marked also on the meter base.

e) The reference voltage in one of the following forms:

— The number of elements if more than one, and the voltage at the meter terminals of the voltage circuit(s).

— The nominal voltage of the system or the secondary voltage of the instrument transformer to which the meter is intended to be connected.

— Examples of voltage markings are shown in Table 3.

f) Principal unit in which the meter reads, for example, kWh.

g) The rated secondary current of the transformer(s) to which the meter should be connected for example, thus: –/5A the basic current and the rated maximum current of the meter may be included in the type designation.

h) The reference frequency in Hz.

j) The meter constant, for example, in the form; X Wh/imp or X imp/kWh

k) The class index of the meter.

m) The reference temperature if different from 27°C.

n) The sign of double square or insulating encased meters.

Information under (a), (b) and (c) may be marked on an external plate permanently attached to the meter cover.

The information under (d) to (e) shall be marked on a name plate preferably placed within the meter.

The marking shall be indelible, distinct and readable from outside the meter.

If the meter registers energy through instrument transformer(s), which are accounted in the meter constant, the transformation ratio(s) shall be marked.

Standard symbols may also be used (*see* IS 12032 series).

Table 3 Voltage Markings

[*Clause* 7.1(e)]

Type of Meter (1)	Method of Marking (2)	Example (3)
1- phase, 2-wire	Voltage between line and neutral	240V
3-phase, 3-wire	2 × Voltage between lines	2 × 110V
3-phase, 4-wire	3 × Voltage between line and neutral	$3 \times 110\sqrt{3}$ 3 × 240 V

7.1.1 ac Static watthour meters can also be marked with BIS Standard Mark (if certified by BIS).

7.2 Connection Diagrams and Terminal Marking

Every meter shall be indelibly marked with a diagram of connections. For polyphase meter, this diagram shall also show the phase sequence for which the meter is intended. It is permissible to indicate the connection diagram by an identification figure in accordance with relevant standards.

If the meter terminals are marked, this marking shall appear on the diagram.

8 CLIMATIC CONDITIONS

8.1 Temperature Range

Temperature range of the meter shall be as indicated in Table 4.

Table 4 Temperature Range

Specified operation range	0°C to + 55°C
Limit range of operation	– 10°C to + 60°C
Limit range for storage and transport	– 10°C to + 70°C

NOTE — For special applications, other temperature values can be used according to agreement between manufacturer and purchaser.

8.2 Relative Humidity

The meter shall meet the relative humidity requirements of Table 5. For combined temperature and humidity test (*see* **12.6.3**).

Table 5 Relative Humidity

Annual mean	< 75%
For 30 days, these days being spread in a natural manner over the year	< 95%
Occasionally on other days	< 85%

The limits of relative humidity as a function of ambient temperature are shown in Annex B.

The graph may be modified in line with metrological conditions prevalence in the place of use.

9 ELECTRICAL REQUIREMENTS

9.1 Power Consumption

9.1.1 *Power Consumption in Voltage Circuit*

The active and apparent power consumption in each voltage circuit of a meter at reference voltage reference temperature and reference frequency shall not exceed the values shown in Table 6.

Table 6 Power Consumption in Voltage Circuit Including the Power Supply

Meters	Class of Meters (0.2 S and 0.5 S)
Single-phase and polyphase (per phase)	1.5 W and 8 VA

NOTES

1 The above figures are mean values. Switching power supplies with peak values in excess of these are permitted but attention should be paid to the rating of associated voltage transformers.

2 In case additional features like remote metering , prepayment metering, etc, are built into the meter then additional loss may be allowed as agreed between supplier and purchaser.

9.1.2 *Power Consumption in Current Circuit*

The apparent power taken by each current circuit at basic current, reference frequency and reference temperature shall not exceed the value shown in Table 7.

Table 7 Apparent Power Consumption in Current Circuit

Meters	Class of Meters (0.2 S and 0.5 S)
Single-phase and polyphase (per phase)	1.0 VA

9.2 Influence of Supply Voltage

9.2.1 *Voltage Range*

Voltage range shall be as given in Table 8.

Table 8 Voltage Range

Specified operating range	0.80 to 1.1 Vref.
Limit range of operation	0.70 to 1.2 Vref.

NOTES

1 For the permissible error due to voltage variation (*see* Table 13).

2 Extended operating ranges will be the subject of purchase contract.

9.2.2 *Voltage Dips and Interruptions*

Voltage dips and interruptions shall not produce a change in the register of more than 0.001 kWh and the test output shall not produce a signal equivalent to more than 0.001 kWh. These values are based on the rated current of 5A and 100 V of the meter. For other voltage and current ratings the value 0.001 kWh has to be converted accordingly depending upon transformation ratio. When the voltage is restored, the meter shall not have suffered degradation of its metrological characteristics.

Further, after this test the data from the memory should not be lost.

For testing *see* **12.7.2**.

9.2.3 *Short-Time Over Current*

Short-time over current shall not damage the meter. The meter shall perform correctly, when back to its initial working conditions and the variation of error shall not exceed the values shown in Table 9.

The meter shall be able to carry for 0.5 second a current equal to 20 times the maximum current.

For testing *see* **12.7.3**.

Table 9 Variations Due to Short-time Over Currents

Value of Current	Power Factor	Limits of Variation in Percentage Error for Meters of Class	
		0.2 S	0.5 S
I_b	1	0.1	0.1

9.3 Influence of Self-Heating

The variation in percentage error due to self-heating shall not exceed the values given in Table 10.

For testing *see* **12.7.4**.

9.4 Influence of Heating

Under normal conditions of use, electrical circuits and insulation shall not reach a temperature which might adversely affect the operation of the meter. The temperature rise at any point of the external surface of the meter shall not exceed by more than 20 K with an ambient temperature at 45°C.

For testing *see* **12.7.5**.

Table 10 Variation in Percentage Error Due to Self-Heating

(*Clause* 9.3)

Value of Current	Power Factor	Limits of Variation in Percentage Error for Meters of Class	
		0.2 S	0.5 S
I_{Max}	1	0.1	0.2
I_{Max}	0.5 lagging	0.1	0.2

9.5 Insulation

The meter and its incorporated auxiliary devices if any, shall be such that they retain adequate dielectric qualities, taking into account of the atmospheric influences and different voltages, to which they are subjected under normal conditions of use.

The meter shall withstand the impulse voltage test and the ac high voltage test as specified in **12.7.6**.

10 ELECTROMAGNETIC COMPATIBILITY (EMC)

10.1 Immunity of Electromagnetic Disturbance

The meter shall be designed in such a way the conducted or radiated electromagnetic disturbance as well as electrostatic discharge do not damage nor substantially influence the meter.

NOTE — The disturbances to be considered are:

a) Electrostatic discharge,

b) Electromagnetic HF field, and

c) Fast transient burst.

For testing *see* **12.8**.

10.2 Radio Interference Suppression

The meter shall not generate conducted or radiated noise which could interfere with other equipment.

For testing *see* **12.8.5**.

11 ACCURACY REQUIREMENTS

11.1 Limits of Error Due to Variation of the Current

When the meter is under the reference conditions given in **12.9.1** the percentage error shall not exceed the limits for the relevant accuracy class given in Tables 11 and 12.

If the meter is designed for the measurement of energy in both directions, the values in Tables 11 and 12 shall apply for each direction.

Table 11 Percentage Error Limits (Single-Phase Meters and Polyphase Meters with Balanced Loads)

Value of Current	Power Factor	Percentage Error Limits for Meters of Class	
		0.2 S	0.5 S
$0.01\ I_b \le I_b < 0.05\ I_b$	1	± 0.4	± 1.0
$0.05\ I_b \le I_b \le I_{Max}$	1	± 0.2	± 0.5
$0.02\ I_b \le I_b < 0.1\ I_b$	0.5 lagging	± 0.5	± 1.0
	0.8 leading	± 0.5	± 1.0
$0.1\ I_b \le I_b \le I_{Max}$	0.5 lagging	± 0.3	± 0.6
	0.8 leading	± 0.3	± 0.6
When specially requested by the user :	0.25 lagging	± 0.5	± 1.0
from $0.2\ I_b$ to I_b	0.5 leading	± 0.5	± 1.0

Table 12 Percentage Error Limits (Polyphase Meters Carrying a Single-Phase Load, but with Balanced Polyphase Voltages Applied to Voltage Circuits)

Value of Current	Power Factor of Relevant Element	Percentage Error Limits for Meters of Class	
		0.2 S	0.5 S
$0.05\ I_b \le I_b \le I_{Max}$	1	± 0.3	± 0.6
$0.1\ I_b \le I_b \le I_{Max}$	0.5 lagging	± 0.4	± 1.0

The difference between the percentage error when the meter is carrying a single-phase load at basic current and unity power factor and the percentage error when the meter is carrying balanced polyphase load at basic current and unity power factor, shall not exceed 0.4, and 0.8 for meters of classes 0.2 S and 0.5 S respectively.

NOTE — When testing for compliance with Table 12 the test current shall be applied to each element, in sequence.

11.2 Limits of Error due to Other Influence Quantities (Voltage-Variation, Frequency Variation, Phase Sequence, Wave Form, Voltage-Unbalance)

Limits of variation in percentage error due to the change of influence quantities with respect to reference conditions, as given in **12.9.1**, shall not exceed the limits for the relevant accuracy class given in Table 13.

11.3 Limits of Error Due to Ambient Temperature Variation

The mean temperature coefficient shall not exceed the limits given in Table 14.

Table 13 Influence Quantities

(*Clauses* 9.2.1 *and* 11.2)

Influence Quantities	Value for Current (Balanced Unless Otherwise Stated)	Power Factor	Limit of Variation in Percentage Error for Meters of Class	
			0.2 S	0.5 S
(1)	(2)	(3)	(4)	(5)
Voltage variation (*see* Note 1) ±10 %	$0.05I_b \le I_b \le I_{Max}$	1	0.1	0.2
	$0.05I_b \le I_b \le I_{Max}$	0.5 lagging	0.2	0.4
Frequency variation ± 5%	$0.05I_b \le I_b \le I_{Max}$	1	0.1	0.2
	$0.05I_b \le I_b \le I_{Max}$	0.5 lagging	0.1	0.2
Wave form: 10 % of third harmonic in the current (*see* Note 2)	$0.05I_b \le I_b \le I_{Max}$	1	0.1	0.1
Reversed phase sequence (*see* Note 3)	$0.1\ I_b$	1	0.05	0.1
Voltage unbalance (*see* Note 4)	I_b	1	0.5	1.0
Auxiliary voltage ±15% (*see* Note 5)	$0.1\ I_b$	1	0.05	0.1
Phase of auxiliary supply voltage by 120° (*see* Note 5)	$0.1\ I_b$	1	0.1	0.2
Continuous induction of external origin (*see* Note 6)	I_b	1	2.0	3.0
Magnetic induction of external origin 0.5 mT (*see* Note 7)	I_b	1	0.5	1.0
Electromagnetic HF fields (*see* Note 8)	I_b	1	1.0	2.0
Operation of accessories (*see* Note 9)	$0.05\ I_b$	1	0.05	0.1

NOTES

1 For the voltage ranges from –20 percent to –10 percent and +10 percent to +20 percent the limits of variation in percentage error are three times the values given in Table 13.

Below 0.8 Vref and up to 0.7 Vref, the said limits are five times the value given in Table 13.

Below 0.7 Vref the error of the meter may vary between +10 percent and –100 percent.

2 The distortion factor of the voltage shall be less than 1percent. The variation in percentage error shall be measured under two conditions. The peak of third harmonic in the first measurement in phase and in the second measurement in antiphase of the peaks of the fundamental current. For polyphase meters, the voltage circuit shall be energized in parallel and the current circuit in series.

3 Applicable for active energy meter only.

4 The polyphase meter shall measure and register within the variation in percentage error limits shown in Table 13 if one or two-phases of the 3-phase network are interrupted, provided

Table 13 (*Concluded*)

the reference phase is available that is Y- phase for three-phase 3-wire meters and neutral for 3-phase 4-wire meters. However the operation of the meter shall not be affected by such removal of reference phase. Applicable for active energy meters only.

5 Applicable only if the auxiliary supply voltage is not internally connected to the voltage measuring circuit.

6 The test conditions are specified in **12.10**.

7 A magnetic induction of external origin of 0.5 mT produced by a current of the same frequency as that of the voltage applied to the meter and under the most unfavourable conditions of phase and direction shall not cause a variation in the percentage error of the meter exceeding the values shown in Table 13. The test conditions are specified in **12.10**.

8 The test conditions are specified in **12.8.3**.

9 Such an accessory, enclosed in the meter case is energized intermittently, for example the electromagnet of a multirate registeı.

It is preferable that the connection to the auxiliary device is/are marked to indicated the correct method of connection, if these connections are made by means of plugs and sockets, these connections should be irreversible.

The determination of the mean temperature coefficient for a given temperature shall be made over a 30°C temperature range 15°C above and 15°C below that temperature, but in no case, the temperature shall not exceed the specified operating temperature range.

11.4 Starting and Running with No-Load

For these tests, the conditions and the values of the influence quantities shall be as stated in **12.9.1** except for any changes specified below.

11.4.1 *Initial Start-up of the Meter*

The meter shall be fully functional within 5s after the rated voltage is applied to meter terminals.

11.4.2 *Running with No-Load*

When the voltage is applied with no current flowing in the current circuit, the test output of the meter shall not produce more than one output pulse count.

For testing *see* **12.12**.

11.5 Starting Current

The meter shall start and continue to register at the current shown in Table 15.

11.6 Meter Constant

Relation between the test output and the indication in the display shall comply with the marking on the name plate.

Table 14 Temperature Coefficient

(*Clause* 11.3)

Value of Current	Power Factor	Mean Temperature Coefficient for Meter of Class	
		0.2 S	0.5 S
From 0.05 I_b to I_{Max}	1	0.01	0.03
From 0.1 I_b to I_{Max}	0.5 lagging	0.02	0.05

Table 15 Starting Currents

(*Clause* 11.5)

	Power Factor	Class of Meter	
		0.2 S	0.5 S
Percentage of basic Current (I_b)	1	0.1	0.1

11.7 Repeatability of Error Test

Repeatability of error at 5 percent I_b and UPF load shall not exceed 0.1 for class 0.2 S and 0.25 for class 0.5 S meters as measured by the dispersion method (*see* **12.16**).

12 TESTS AND TEST CONDITIONS

12.1 Test Conditions

All tests are carried out under reference conditions unless otherwise stated in the relevant clause.

12.2 Classification of Tests

The schedule and recommended sequence is given in Table 16.

In case of modifications to the meter made after the type test and affecting only part of the meter, it will be sufficient to perform limited tests on the characteristics that may be affected by the modification.

12.2.1 *Number of Samples and Criteria for Conformity*

Type tests shall be applied to three test specimens; in the event of one specimen failing to comply in any respect, further three specimens shall be taken all of which shall comply with the requirements of the standard.

12.2.2 *Schedule of Acceptance Tests*

Required tests are marked with 'A' in Table 16.

12.2.2.1 *Recommended sampling plan and criteria for acceptance*

A recommended sampling plan and the criteria for acceptance of the lot are given in Annex E.

12.2.3 *Schedule of Routine Tests*

12.2.3.1 Required tests are marked with 'R' in Table 16.

12.3 Test of Mechanical Requirements

12.3.1 *Shock Test*

The test shall be carried out as per IS 9000 (Part 7/ Sec 1 to 5 : 1979) under the following conditions :

— Meter is non-operating condition, without the packing.
— Half-sine pulse.
— Peak acceleration : 40 g (400 m/s 2).
— Duration of the pulse : 18 ms.
— No of shock : two in both direction of three mutual perpendicular axes (Total of 12 shocks).

Table 16 Schedule of Type Tests

(*Clause* 12.2)

Sl No.	Test	Clause Reference	A	R
1	**Test of Insulation Properties**	12.7.6		
1.1	Impulse voltage test	12.7.6.2		
1.2	ac High voltage test	12.7.6.3	A	R
1.3	Insulation test	12.7.6.4	A	R
2	**Test of Accuracy Requirements**	12.9		
2.1	Test on limits of error	11.1	A	R
2.2	Interpretation of test results	12.15		
2.3	Test of meter constant	12.14	A	
2.4	Test of starting condition	12.13	A	R
2.5	Test of no-load condition	12.12	A	R
2.6	Test of ambient temperature influence	12.11		
2.7	Test of repeatability of error	12.16	A	
2.8	Test of influence quantities	12.10		
3	**Test of Electrical Requirement**	12.7		
3.1	Test for power consumption	12.7.1	A	
3.2	Test of influence of supply voltage	12.7.2		
3.3	Test of influence short time overcurrent	12.7.3		
3.4	Test of influence of self-heating	12.7.4		
3.5	Test of influence of heating	12.7.5		
4	**Test for Electromagnetic Compatibility**	12.8		
4.1	Radio interference measurement	12.8.5		
4.2	Fast transient burst test	12.8.4		
4.3	Test of immunity to electrostatic discharges	12.8.2		
4.4	Test of immunity to electromagnetic HF field	12.8.3		
5	**Test for Climatic Influences**	12.6		
5.1	Dry heat test	12.6.1		
5.2	Cold test	12.6.2		
5.3	Damp heat cyclic test	12.6.3		
6	**Test for Mechanical Requirements**	12.3		
6.1	Vibration test	12.3.2		
6.2	Shock test	12.3.1		
6.3	Spring hammer test	12.3.3		
6.4	Protection against penetration of dust and water	12.5		
6.5	Test of resistance to heat and fire	12.4		

A = Acceptance test; R = Routine test

After the test, the meter shall show no damage or change of information. After the test, variation in percentage error shall not exceed the 50 percent of accuracy class index at I_b, $0.05I_b$ and I_{max} (at cos $\phi = 1$).

12.3.2 *Vibration Test*

The test shall be carried out as per IS 9000 (Part 8) under the following conditions :

— Meter in non-operation condition. Without the packing.
— Frequency range : 10 - 150 - 10 Hz.
— Transition frequency : 60 Hz.
— f < 60 Hz constant amplitude of movement 0.15 mm.
— f > 60 Hz constant acceleration 2 g (1g =9.8 m/s²).
— Single point control.
— Number of sweep cycles per axis : 10.

NOTE — 10 sweep cycles = 75 minutes.

After the test the meter shall show no damage or change of the information. After the test variation in percentage error of the meter error shall not exceed 50 percent of class index at 0.05 I_b, basic current and maximum current (at Cos $\phi = 1$).

12.3.3 *Spring Hammer Test*

The mechanical strength of the meter case shall be tested with a spring hammer [IEC 60068-2-75 (1997-05)].

The meter shall be mounted in its normal working position and the spring hammer shall act on the outer surfaces of the meter cover (including windows and on the terminal cover with a kinetic energy of 0.22 Nm ± 0.05 Nm.

The result of the test is satisfactory if the meter case and terminal cover do not sustain damage which could affect the function of the meter and it is not possible to touch live parts. Slight damage which doesn't impair the protection against indirect contact or the penetration of solid objects, dust and water is acceptable.

12.4 Test of Resistance to Heat and Fire

The test shall be carried out according to IS 11000 (Part 2/Sec 1) with the following temperatures:

— Terminal block : 960 ± 15°C
— Terminal cover and meter case : 650 ± 10°C
— Duration of application : 30 s ± 1s.

The contact with the glow wire may occur at any random location. If the terminal block is integral with the meter base, it is sufficient to carry out the test only on the terminal block.

12.5 Test of Protection Against Penetration of Dust and Water

The test shall be carried out according to IS 12063 under the following conditions :

a) Protection against penetration of dust

— Meter in non-operating condition and mounted on an artificial wall.
— The test should be conducted with sample lengths of cable (exposed and sealed) of the types specified by the manufacturer in place.
— 1st characteristic digit : 5 (IP 5X) resp.

Any ingress of dust only be in a quantity not impairing the operation of the meter, and not impairing its dielectric strength (insulating strength).

For testing *see* **12.7.6.4**.

b) Protection against penetration of water

— Meter in non-operating condition.
— 2nd characteristic digit : 1 (IP X 1).

Any ingress of water must only be in a quantity not impairing the operation of the meter, and not impairing its dielectric strength (insulating strength).

For testing *see* **12.7.6.4.**

12.6 Test for Climatic Influences

After each of the climatic tests, the meter shall show no damage or change of the information . These tests should not affect the functioning of the meters.

12.6.1 *Dry Heat Test*

The test shall be carried out according to relevant section of IS 9000 (Part 3/Sec 3) under the following conditions :

— Meter in non-operating condition.
— Temperature : + 70 ± 2°C.
— Duration of the test : 72 hours.

12.6.2 *Cold Test*

The test shall be carried out according to relevant section of IS 9000 (Part 2/Sec 3) under the following conditions :

— Meter in non-operating condition.
— Temperature : – 25 ± 2°C.
— Duration of the test : 72 hours.

12.6.3 *Damp Heat Cycle Test*

The test shall be carried out according to relevant section of IS 9000 (Part 5/Sec 2) under the following conditions:

— Meter in operating condition.
— Voltage and auxiliary circuits energized with reference voltage.
— Without any circuits in the current circuits.
— Upper temperature 40°C ± 2°C.
— No special precautions shall be taken regarding the removal of surface moisture.
— Duration of test : 6 cycles.

Twenty four hours after the end of this test the meter shall be submitted to the following tests:

a) An insulation test according to **12.7.6.4**.
b) A functional test. The meter shall show no damage or change of information.

The damp heat test also serves as a corrosion test. The result is judged visually. No trace of corrosion likely to affect the functional properties of the meter shall be apparent.

12.7 Test of Electrical Requirements

12.7.1 *Test of Power Consumption*

The power consumption in the voltage and current circuit shall be determined at reference values of the influencing quantities given in **12.9.1** by any suitable method. The overall accuracy shall be better than 5 percent.

12.7.2 *Test of Influence of Supply Voltage*

The test shall be carried out under the following conditions:

— Meter in operating condition.
— Voltage and auxiliary circuits energized with reference voltage.
— Without any current in the current circuits.

a) Voltage interruptions of Vref = 100 percent
   — Interruption time : 1 s.
   — Number of interruptions : 3.
   — Restoring time between interruptions : 50 ms.
   See also Annex C.
b) Voltage interruption of Vref = 100 percent
   — Interruption time : 20 ms.
   — Number of interruptions : 1.
   See also Annex C.
c) Voltage dips of Vref = 50 percent
   — Dip time : 1 min.
   — Number of dips : 1.
   see also Annex C.

For requirement *see* **9.2.2**.

12.7.3 *Test of Influence of Short-Time Over Currents*

The test circuit shall be practically non-inductive.

After the application of the short-time over current with the voltage maintained at the terminals, the meter shall be allowed to return to the initial temperature with the voltage circuit(s) energized (about one hour). For requirement *see* **9.2.3**.

12.7.4 *Test of Influence of Self-Heating*

The test shall be carried out as follows :

After the voltage circuits have been energized at reference voltage for at least 2h, meters without any current in the current circuits, the rated maximum current shall be applied to the current circuits. The meter error shall be measured at unity power-factor immediately after the current is applied and then at intervals short enough to allow a correct drawing to be made of the curve of error variation as a function of time.

The test shall be carried out for at least 1 h and in any event until the variation of error during 20 min does not exceed 0.1 percent or the measurement uncertainties whichever is greater.

The same test shall be carried out than at 0.5 (lagging) power factor.

The variation of error, measured as specified, shall not exceed the values given in Table 10.

12.7.5 *Test of Influence of Heating*

With each current circuit of the meter carrying rated maximum current and with each voltage circuits (and with those auxiliary, voltage circuits which are energized for periods of longer duration than their thermal time constants) carrying 1.15 times the reference voltage, the temperature rise of the external surface shall not exceed by more than 20 K, with the ambient temperature between 25°C to 45°C.

During the test, the duration of which shall be 2 h, the meter shall be not exposed to draught or direct solar radiation.

After the test, the meter shall show no damage and shall comply with the dielectric tests of **12.7.6.4**.

12.7.6 *Test of Insulation Properties*

12.7.6.1 *General test conditions*

The test shall be carried out only on a complete meter with its cover (except when indicated hereafter) and terminal cover, the terminal screws being screwed down to maximum applicable conductor fitted in the terminals. Test procedure shall be in accordance with IS 2071 (Part 1).

The impulse voltage tests shall be carried out first and the ac voltage tests afterwards.

During type tests, the dielectric property tests are considered to be valid only for the terminal arrangement of the meter which has undergone the tests. When the terminal arrangement differ, all the dielectric property tests shall be carried out for each arrangement.

For the purpose of these tests, the 'earth' has the following meaning :

a) When the meter case is made of metal, the earth is the case itself placed on a flat conducting surface.

b) When the meter case or only a part of it is made of insulating material, the earth is a conductive foil wrapped around the meter, touching all accessible conductive parts and connected to the flat conducting surface on which the meter base is placed. Where the terminal cover makes it possible, the conductive foil shall approach the terminals and holes for the conductors within a distance of not more than 2 cm.

During the impulse and the ac voltage tests, the circuits which are not under test are connected to the earth as indicated hereafter. A flashover (capacitance discharge) is not necessarily a criterion of failure as this may occurs in a position that does not damage and the manufacturer shall decide, whether or not to eliminate the cause, provided other criteria of acceptance are met.

In this sub-clause, the expression all the terminals means the whole set of the terminals of the current circuits, voltage circuits and, if any, auxiliary circuits having a reference voltage over 40 V.

These shall be made in normal conditions of use. During the test, the quality of the insulation shall not be impaired by dust or abnormal humidity.

Unless otherwise specified, the normal conditions for insulation test are :

— ambient temperature 20°C to 35°C.

— relative humidity 45 percent to 95 percent.

— atmospheric pressure 86 to 106 kPa (860 mbar to 1 060 mbar).

12.7.6.2 *Impulse voltage test*

The impulse of 6 kV is applied ten times with one polarity and then repeated with the other polarity. The minimum time between the impulses shall be 3 second. The waveform and the generator characteristics shall be in accordance with IEC 61000-4-5 (1995) 'Electromagnetic compatibility (EMC) — Part 4: Testing and measurement techniques — Section 5: Surge Immunity test'.

a) Impulse voltage tests for circuits and between

the circuits. The test shall be made independently on each circuit (or assembly of circuits) which are insulated from the other circuits of the meter in normal use. The terminals of the circuits which are not subjected to impulse voltage shall be connected to earth.

Thus, when in normal use the voltage and the current circuits of a measuring elements are connected together, the test shall be made on the whole. The other end of the voltage circuit shall be connected to earth and impulse voltage shall be applied between the terminal of the current circuit and earth. When several voltage circuits of a meter have a common point, this point shall be connected to earth and the impulse voltage successively applied between each of the free ends of the connections (or the current circuit connected to it) and earth.

When in normal use, the voltage and the current circuits of the same measuring element are separated and appropriately insulated (for example, each circuit connected to measuring transformer) the test shall be made separately on each circuit.

During the test of a current circuit, the terminals of the other circuits shall be connected to earth and the impulse voltage shall be applied between one of the terminals of the current circuit and earth. During the test of a voltage circuit, the terminals of the other circuits and one of the terminals of the voltage circuit under test shall be connected to earth and the impulse voltage shall be applied between the other terminal of the voltage circuit and earth.

The auxiliary circuits intended to be connected either directly to the mains or to the same voltage transformers as the meter circuits and with a reference voltage over 40 V shall be subjected to the impulse voltage test in the same conditions as those already given for voltage circuits. The other auxiliary circuits shall not be tested.

b) Impulse voltage test of electric circuits relative to earth. All the terminals of the electric circuits of the meter, including those of the auxiliary circuits with a reference voltage over 40 V, shall be connected together.

The auxiliary circuits with a reference voltage below or equal to 40 V shall be connected to earth.

The impulse voltage shall be applied between all the electric circuits and earth.

12.7.6.3 *ac Voltage test*

The ac voltage test shall be carried out in accordance with Table 17 for type test and acceptance test of new meters. For any subsequent test, the voltage applied shall be 80 percent of the test voltage indicated in the table.

The test voltage shall be substantially sinusoidal, having a frequency between 45 Hz and 55 Hz, and applied for one minute. The power source shall be capable of supplying at least 500 VA.

During the test no flashover, disruptive discharge, puncture shall occur.

During the tests relative to earth the auxiliary circuits with reference voltage equal to or below 40 V shall be connected to earth.

Table 17 ac Voltage Tests

(*Clause* 12.7.6.3)

Test Voltage (r.m.s.) (1)	Points of Application of the Test Voltage (2)
2 kV	A) Test to be carried out with the case closed, and terminal cover in place a) Between, on the one hand all the current and voltage circuits as well as the auxiliary circuits whose reference voltage is over 40 V, connected together, and, on the other hand, earth b) Between circuits not intended to be connected together in service
4 kV (For test in item a)	B) Additional tests for insulating encased meters a) Between on the one hand all the current and voltage circuits as well the auxiliary circuits whose reference voltage is over 40 V, connected together, and, on the other hand, earth (*see* Note 1)
40 V (for test in item c)	b) a visual inspection for compliance with the conditions of **6.7** c) Between on the one hand all conductive parts in side the meter, connected together and, on the other hand, all conductive parts outside the meter case that are accessible with the test finger connected together (*see* Note 2)

NOTES

1 The test in item (a) of Part B is to be carried out, with the case closed, the cover and terminal cover in place.

2 The test in item (c) of Part B is not necessary, if test in item (b) leaves no doubt.

12.7.6.4 *Insulation resistance test*

The insulation resistance test shall be carried out in accordance with Table 18. The voltage shall be applied for a minimum of one minute or more for the pointer of the insulation tester to have come practically to rest.

Table 18 Insulation Resistance Test

Test Voltage		Points of Application of the Test Voltage	Insulation Resistance
(1)		(2)	(3)
500 ± 50 V dc	a)	Between, on the one hand all the current and voltage circuits as well as the auxiliary circuits whose reference voltage is over 40 V, connected together, and, on the other hand, earth	5 MΩ
	b)	Between circuits not intended to be connected together in service	50 MΩ

NOTE — Where two or more voltage circuits are permanently joined together, the combination may be treated as one circuit for this test.

12.8 Test for Electromagnetic Compatibility (EMC) and Electromagnetic Interference (EMI)

12.8.1 *General Test Conditions*

For all these tests, the meter shall be in its normal working position with the cover and terminal cover in place. All parts intended to be earthed shall be earthed.

After these tests, the meter shall show no damage or change of information..

12.8.2 *Test for Immunity to Electrostatic Discharge (ESD)*

The test shall carried out according to IEC 61000-4-2 (1995), 'Electromagnetic Compatibility (EMC) — Part 4: Testing and measurement techniques — Section 2 : Electrostatic discharge immunity test' under the following conditions:

- Contact Discharge
- Test Voltage : 8 kV
- Test severity level : 4
- Number of discharges : 10
- Voltage and auxiliary circuits energized with reference voltage.
- Without any current in the current circuits and the current terminal should be open circuit.

The application of the electrostatic discharge shall not produce a change in the register of more than 0.001 kWh and the test output shall not produce a signal equivalent to more than 0.001 kWh. These values are based on the rated current of 5A and 100 V of the meter. For other voltage and current ratings the value 0.001 kWh has to be converted accordingly, depending on the transformation ratios.

After application of the electrostatic discharge the meter shall show no damage or change of information and shall stay within the accuracy requirement of this standard.

12.8.3 *Test for Immunity to Electromagnetic HF Fields*

The test shall be carried out according to IEC 61000-4-3 (1998) 'Electromagentic compatibility (EMC) — Part 4: Testing and measurement techniques — Section 3: Radiated, radio frequency, electromagnetic field immunity test' under the following conditions;

- Voltage and auxiliary circuits energized with reference voltage.
- Frequency band: 80 MHz to 1 000 MHz.
- Test field strength : 10 V/m.
- Test severity level : 3.

a) Without any current in the transformer circuits and the current should be open circuit.

The application of the HF field shall not produce a change in the register of more than 0.001 kWh and the test output shall not produce a signal equivalent to more than 0.001 kWh. These values are based on the rated current of 5A and 100 V of the meter. For other voltage and current ratings the value 0.001 kWh has to be converted accordingly, depending on transformation ratios.

b) With basic current I_b and power factor equal to unity, at sensitive frequencies or frequencies of dominant interest, the variation of error shall be within the limit given in Table 13.

12.8.4 *Fast Transient Burst Test*

The test shall be carried out according to IEC 61000-4-4 (1995) 'Electromagnetic Compatibility (EMC) —Part 4: Testing and measurement techniques — Section 4 : Electrical fast transient burst immunity test' under the following conditions :

- Meter in operating condition
  - Voltage and auxiliary circuits energized with reference voltage.
  - Without any current in the current circuits and the current terminals should be open circuit.
- Test Voltage : 4 kV
  - Test severity level : 4
  - Test voltage on I/O signal , data and control lines : 2kV.
  - Duration of the test : minimum 60 s.

Test points are :

a) Between the terminal of each circuit normally connected to the mains,

b) Between any two independent circuits having reference voltages over 40 V, and

c) Between each independent circuits having reference voltages over 40 V and earth.

During the test, there shall not be a change in the register of more than 0.001 kWh and the test output shall not produce a signal equivalent to more than 0.001 kWh. These values are based on the rated current of 5A and 100 volt of the meter. For other voltage and current ratings the value 0.001 kWh has to be converted accordingly, depending on transformation ratios.

12.8.5 *Radio Interference Measurement*

The test for radio interference shall be carried out for the frequencies from 0.15 MHz to 30 MHz and for the frequencies form 30 MHz to 300 MHz as per IS 6842.

12.9 Test of Accuracy Requirements

12.9.1 *General Test Conditions*

Determination of meter errors for the purpose of verification of accuracy requirement (*see* **11**) and variation of such errors for the purpose of other requirements shall be carried out in a meter testing station having Meter Testing Equipment of relevant accuracy class as laid down in IS 12346.

The following test conditions shall be maintained :

a) The meter shall be tested in its case with cover in position; all parts intended to be earthed shall be earthed;

b) Before any tests are made, the circuits shall have been energized for a time to reach thermal stability;

c) In addition, for polyphase meters;

— The phase sequence shall be as marked on the diagram of connections.

— The voltages and currents shall be substantially balanced (*see* Tables 19 and 20).

Table 19 Voltage and Current Balance

(*Clause* 12.9.1)

Polyphase Meters	Class of Meters	
	0.2 S	0.5 S
(1)	(2)	(3)
Each of the voltages between line and neutral or between any two lines shall not differ from the average corresponding voltage by more than	±1 percent	± 1 percnet
Each of the currents in the current circuit shall not differ from the average current by more than	± 1 percent	± 1 percent
The phase displacements of each of these currents from the corresponding line-to-neutral voltage, irrespective of the power factor, shall not differ from each other by more than	2°	2°

d) The minimum test period at any test point shall contain sufficient number of cycles (more than 1 000) to take care instantaneous power variation within a cycle. The maximum test period is however determined by homogeneity and resolution of test output (*see* **6.11**).

e) The reference condition shall be as specified in Table 20.

Table 20 Reference Conditions

(*Clause* 12.9.1)

Influence Quantity (1)	Reference Value (2)	Permissibile Tolerance (3)
Ambient temperature (*see* Note 1)	Reference temperature or in its absence 27°C	± 2°C
Voltage	Reference voltage (*see* Note 3)	± 1 percent
Frequency	Reference frequency (*see* Note 3)	± 0.3 percent
Waveform	Sinusoidal voltage and current	Distortion factor less than 2 percent
Magnetic induction of external origin at the reference frequency	Magnetic induction equal to zero (*see* Note 4)	Induction value which causes a variation of error not greater than 0.1 percent (0.2 S) and 0.2 percent (0.5 S) but in any case should not be greater than 0.05 mT (*see* Note 2)

NOTES

1 If the tests are made at a temperature other than the reference temperature, including permissible tolerances, the results shall be corrected by applying the appropriate temperature coefficient of the meter.

2 The test consists of:

a) For a single-phase meter, determining the errors at first with the meter normally connected to the mains and then after inverting the conditions to current circuits as well as to the voltage circuits. Half of the difference between the two errors is the valued of the variation of error. Because of the unknown phase of the external field. The test has to be made at 0.1 I_b at unity power factor and 0.2 I_b at 0.5 lag power factor.

b) For a three-phase meter making three measurements at 0.1 I_b at unity power factor after each of which the connections to the current circuits and voltage circuits are changed over 120° while the phase sequences is not altered. The greatest difference between each of the errors so determined and their average value is the value of the variation of error.

3 The reference conditions for voltage and frequency apply to both the measuring circuit and the auxiliary supply(ies).

4 This magnetic induction is that at the place of test without the presence of the meter and its connections.

12.10 Test of Influence Quantities

It shall be verified that the requirements of influence quantities as fixed under **11.1** and **11.2** are satisfied. Test for variation caused by a particular influence quantity should be performed independently with all other influence quantities at their reference conditions.

(*see* Table 20). The continuous magnetic induction may be obtained by using the electromagnet according to Annex D, energized with a dc current. This magnetic field shall be applied to all accessible surfaces of the meter when it is mounted as for normal use. The value of the magneto-motive force to be applied shall be 1 000 ampere-turns.

The magnetic induction may be obtained by placing the meter in the centre of a circular coil. One meter in mean diameter, of square section of small radial thickness relative to the diameter, and having 400 ampere-turns.

12.11 Test of Ambient Temperature Influence

It shall be verified that the ambient temperature influence as fixed under **11.3** is satisfied.

12.12 Test of No-Load Condition

For this test the current circuit must be open circuit and a voltage of 115 percent of the reference voltage shall be applied to the voltage circuits.

The minimum test period shall be 20 times the actual test period of starting current. The maximum test period shall be limited to 200 minutes.

During this test the test output of the meter shall not produce more than one output pulse/count.

12.13 Test of Starting Conditions

It shall be verified that the starting requirements as fixed under **11.5** are satisfied.

12.14 Test of Meter Constant/ Registration

The requirement of **11.5** shall be verified at one test point, preferably at I_{Max} UPF.

Although this verification is not required for meters having test output in the form of high resolution register, a long period registration test shall be performed at this test points to verify conformity of registration error, as indicated by the display of the meter and as distinct from any other external display used for testing purpose, within the limits specified in Table 11.

12.15 Limits of error and Interpretation of Test Results

a) Limits of error as specified in **11.1** shall be verified.

b) Certain test results may fall outside the limits indicated in Tables 11 and 12. Owing to uncertainties of measurements and other parameters capable of influencing the measurements. However, if by one displacement of the zero line parallel to itself by no more than the limits indicated in Table 21, all the test result are brought within the limits indicated in Tables 11 and 12, the meter type shall be considered acceptable.

c) If the tests are made at a temperature other than the reference temperature, including permissible tolerances, the results shall be corrected by applying the appropriate temperature coefficient of the meter.

Table 21 Interpretation of Test Results

	Class of Meter	
	0.2 S	0.5 S
Permissible displacement of the zero line, percent	0.1	0.2

12.16 Repeatability of Error Test

Test shall be carried out at 0.05 I_b, I_b at UPF load under reference test conditions. Twenty error samples shall be taken at time-intervals of 30 minutes. Identical test condition shall be maintained through out the test.

For acceptance test six error tests may be carried out at time interval of at least 5 minutes.

ANNEX A

(*Clause* 2)

LIST OF REFERRED INDIAN STANDARDS

IS No.	*Title*
1401 : 1970	Accessbility test probes (*first revision*)
2701 (Part 1) : 1974	Method for high voltage testing : Part 1 General definitions and test requirements
4905 : 1968	Methods for random sampling
6842 : 1977	Limits of electromagnetic interference
9000	Basic environmental testing proceudures for electronic and electrical items:
(Part 2/Sec 3) : 1977	Cold test, Section 3 Cold test for non-heat dissipating items with gradual change of temperature
(Part 3/Sec 3) : 1977	Dry heat test, Section 3 Dry heat test for non-heat dissipating items with gradual change of temperature
(Part 5/Sec 2) : 1981	Damp heat (cyclic) test, Section 2 12+12h cycle
(Part 7/Sec 1 to 5) : 1979	Impact test (Sections 1 to 5 in one voulme)
(Part 8) : 1987	Vibration (sinusoidal) test
11000 (Part 2/ Sec 1) : 1984	Fire hazard testing : Part 2 Test methods, Section 1 Glow-wire and guidance
11731 (Part 1) : 1986	Methods of tests for determination of flammability of solid electrical insulating material when exposed to an igniting source: Part 1 Horizontal specimen method
12032 series	Graphical symbols for diagrams in the field of eletrotechnology
12063 : 1987	Classification of degrees of protection provided by enclosures of electrical equipment.
12346 : 1988	Testing equipment for ac electrical energy meters
12360 : 1988	Voltage bands for electrical installations including preferred voltages and frequency
13010 : 1990	ac Watthour meters, class 0.5, 1 and 2
13779 : 1993	ac Static watthour meters class 1 and 2 — Specification

ANNEX B

(*Clause* 8.2)

RELATIONSHIP BETWEEN AMBIENT AIR TEMPERATURE AND RELATIVE HUMIDITY

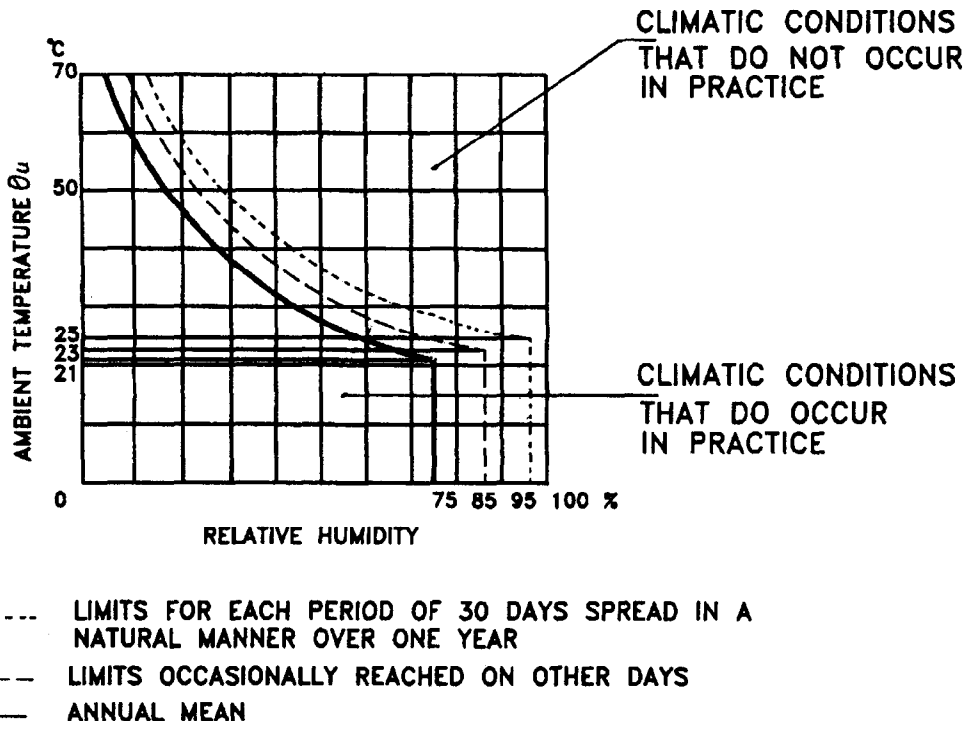

ANNEX C

(*Clause* 12.7.2)

VOLTAGE WAVE FROM THE TESTS OF INFLUENCE OF SUPPLY VOLTAGE

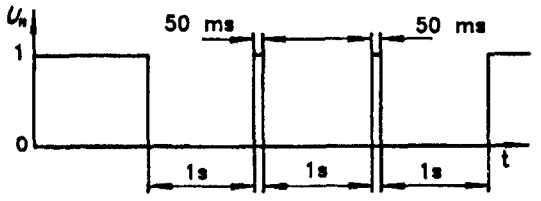

FIG. C_1 VOLTAGE INTERRUPTIONS OF ΔU = 100%, 1s

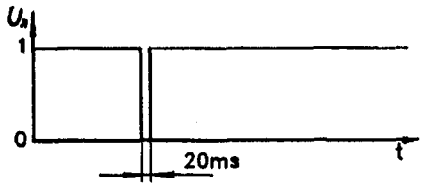

FIG. C_2 VOLTAGE INTERRUPTIONS OF ΔU = 100%, 20 ms

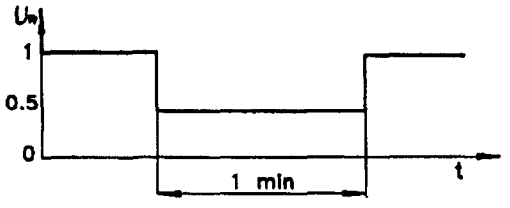

FIG. C_3 VOLTAGE INTERRUPTIONS OF ΔU = 50%

ANNEX D

(*Clause* 12.10)

ELECTROMAGNET FOR TESTING THE INFLUENCE OF EXTERNALLY-PRODUCED MAGNETIC FIELDS

(All dimensions in millimetres.)

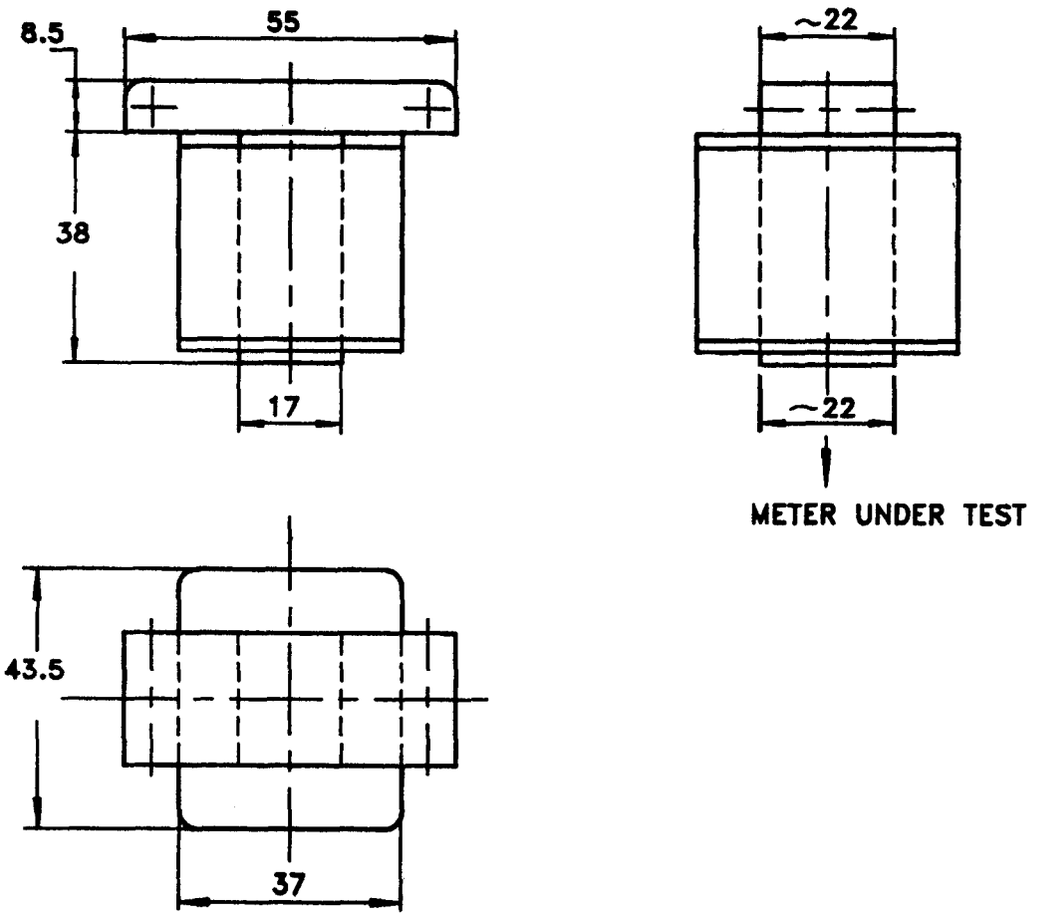

Examples of winding : 500 turns 0.6 ϕ/0.28 mm^2
or : 1 000 turns 0.4 ϕ/0.126 mm^2

Core Lamination : 1.0 W/kg

ANNEX E

(*Clause* 12.2.2.1)

RECOMMENDED SAMPLING PLAN

E-1 LOT

E-1.1 In any consignment, all the meters of the same type and rating manufactured by the same factory during the same period shall be grouped together to constitute a lot.

E-1.2 Sample shall be tested from each lot for ascertaining the conformity of the meters to the requirements of specified acceptance test.

E-2 SCALE OF SAMPLING

E-2.1 The number of meters to be selected from the lot depends upon the size of the lot and shall be in accordance with Table 22.

Table 22 Sampling Plan

Lot Size	N_1 [1]	N_2 [2]	(N_1+N_2)	C_1	C_2
(1)	(2)	(3)	(4)	(5)	(6)
Up to 300	8	—	8	0	—
301 to 500	13	13	26	0	2
501 to 1 000	20	20	40	0	3
1 001 and above	32	32	64	1	4

[1] Size of the first sample.

[2] Size of the second sample.

E-2.2 The meters shall be taken at random from the lot. The procedure given in IS 4905 may be adapted.

E-3 NUMBER OF TESTS AND CRITERIA FOR ACCEPTANCE

E-3.1 Test of No Load Condition and Starting Condition

A sample of N_1 meters selected according to col 2 of Table 22 shall be tested for the above tests. Any meter failing in any one of these tests shall be considered defective. If the number of defectives found in the sample is less than or equal to C_1, the lot shall be considered to be conforming to these tests. If the number of defectives is greater than or equal to C_2, the lot shall be considered as not conforming to these tests. If the number of defectives is between C_1 and C_2, a further sample of N_2 meters shall be taken according to col 3 of Table 22 and subjected to these tests. If the number of defectives in two samples combined is less than C_2, the lot shall be considered as conforming to these tests, otherwise rejected.

E-3.2 Tests of insulation resistance, ac voltage tests, test of power consumption, test of meter constant/ registration, limits of error and interpretation of test results and adjustment (if required).

From the sample of meters which have been drawn according to **E-3.1** and those that have passed all tests of **E-3.1**, a sample of 8 meters shall be tested, all of which shall pass for conformity to these tests. If any of the meters fails in any of these tests, the whole lot shall be declared not conforming to the requirements of these tests.

E-3.3 Tests for Repeatability of Error

Above tests shall be carried out on 3 samples selected from above 8 meters under **E-3.2** and shall be tested for repeatability of error tests separately. If any one of the meters fails the whole lot shall be declared not conforming to the requirments of these tests.

E-3.4 The lot shall be considered as conforming to this specification, if provisions of **E-3.1**, **E-3.2** and **E-3.3** are satisfied.

ANNEX F

(*Clause* 3.1.8)

DIRECTION AND SIGN OF REACTIVE POWER

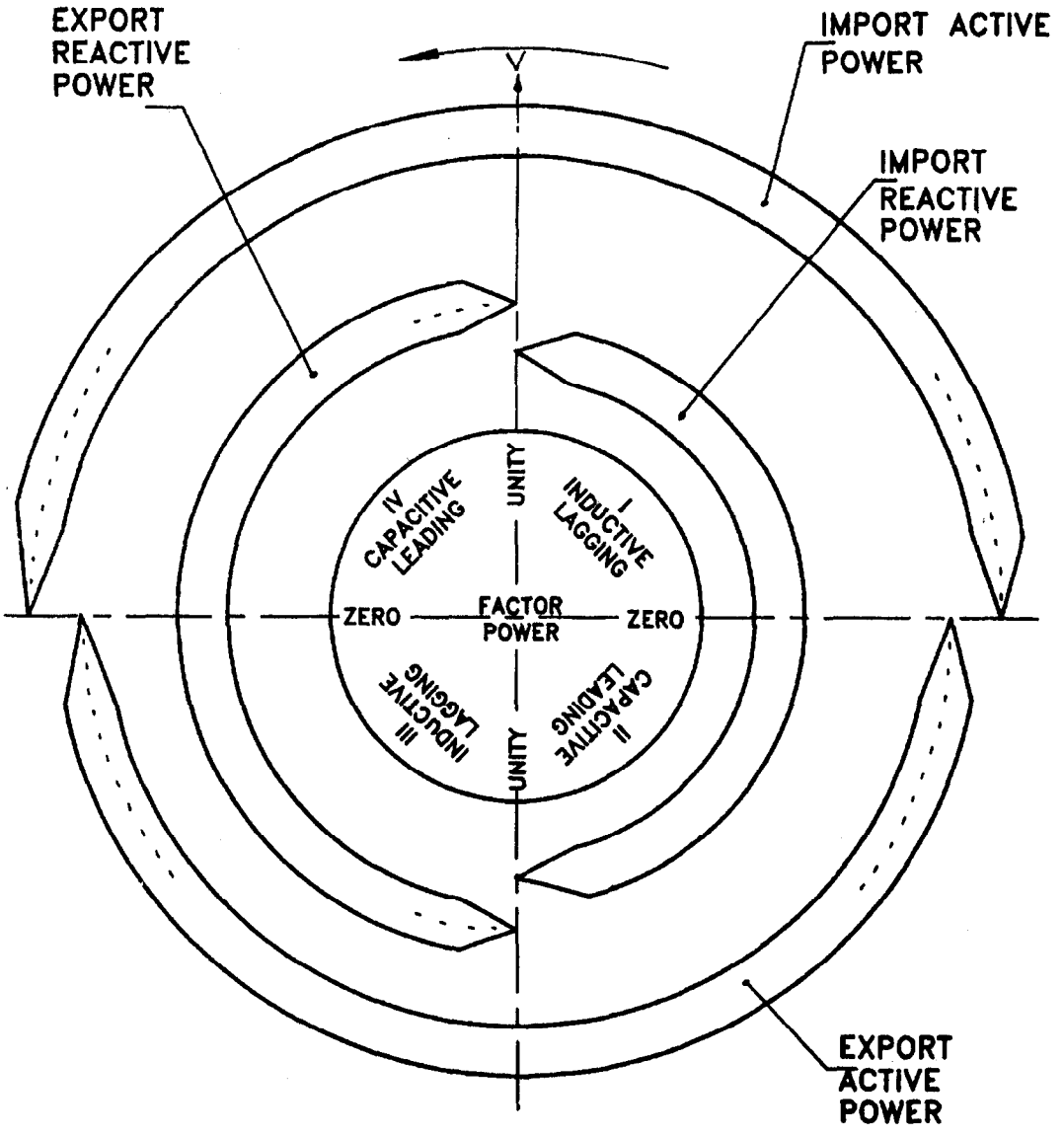

NOTES

1 If the upright line is taken as the voltage vector and a line is drawn to represent the current vector of a single-phase or balanced three-phase system, this current vector will indicate the condition of the other quantities.

2 Reference of this diagram is the voltage vector *V* (fixed on upright line).

3 The current vector/varies its direction according to the phase angle ø.

4 The phase angle ϕ between current/and voltage *V* is taken positive in the clockwise direction.

ANNEX G

(*Foreword*)

RECOMMENDATIONS FOR ADDITIONAL REQUIREMENTS

G-0 ac Static energy meters, especially multi-functional multi-parameter (for example, three-vectors) meters may be provided with additional facilities to cater to the needs of specific applications. Recommendations for some such requirements are furnished below. The required additional facilities in the meter are to be agreed between the supplier and the user. Besides the references made in foreword, reference is made to Technical Report No. 111 : 1997 'Specification for common meter reading instrument' issued by Central Board of Irrigation and Power, New Delhi.

G-1 ADDITIONAL DEFINITIONS

G-1.1 Volt-Ampere Hour Meter (VAh Meter)

An instrument intended to measure apparent energy by integrating apparent power with reference to time.

G-1.2 Static Volt-Ampere Hour Meter

A meter in which current and voltage act on solid state (electronic) elements to produce an output pulse count proportional to volt-ampere hour.

G-1.3 Demand Integration Period

The nominal duration of the consecutive equal intervals of time (30 minutes) used for maximum demand computing.

G-1.4 Indicated Maximum Demand

The highest value of the mean power (active, reactive or apparent) indicated by the maximum demand register during successive equal intervals of time between one zero resetting of the maximum demand register and the next.

G-1.5 Time of Day (TOD) Meter

A multi-rate meter provided with a clock and a number of energy/demand registers, each operative during specified time intervals as required for different tariffs for different time of day.

G-1.6 Communication Port

The device used to input data to the meter or to output data from the meter.

G-1.7 Meter Reading Instrument (MRI)

Hand held portable equipment for transferring data to or from ac static electrical energy meters from or to the base computer station or an external peripheral.

G-1.8 Common Meter Reading Instrument (CMRI)

It is a meter reading instrument with necessary accessories which is capable of interrogating with various makes of ac static electrical energy meters when loaded with the corresponding meter specific software(s) called meter reading instrument programme(s).

G-2 QUANTITIES TO BE MEASURED AND DISPLAYED

The meter shall be capable of measuring and displaying the following electrical quantities for polyphase balanced or unbalanced loads, within specified accuracy limits.

G.2.1 Active energy import, active energy export, reactive energy import, reactive energy export, apparent energy, maximum demand (kVA/kW), cumulative maximum demand (kVA/kW), rising demand with elapsed time.

G-2.2 It should be possible to display various instantaneous quantities, for example phase wise details of kW, kVA and power factor, overall kVA, overall kW, overall power factor, frequency, count for number of MD resets, real time and check for display segments, within accuracy limits agreed by the manufacturer and the user.

G-3 APPLICATION OF CURRENT AND VOLTAGE TRANSFORMER RATIO

It is preferable for the meter to have facilities for making the registration, taking in to account CT and VT ratios.

G-4 MD RESET

A meter provided with maximum demand register shall have at least one of the following MD resetting options:

a) Automatic reset at the end of a certain period predefined by the user (say at a specific date of a month).

b) Resetting through a common hand held unit capable of communicating with the meter with proper security.

c) Manual resetting arrangement with sealing facility.

G-5 MAXIMUM DEMAND INTEGRATION PERIOD (DIP)

G-5.1 DIP can be set at either 30 minutes or 15 minutes by the manufacturer's works. The

adjustment option shall be available in the meter not accessible by the user.

G-5.2 DIP may commence either at the time of resetting the maximum demand or at the fixed intervals of the real time as agreed by the user and the manufacturer.

G-5.3 The rising demand with the elapsed time should be held in the memory in the event of interruption or switching off supply and it should not become zero on such instances.

G-6 DISPLAY OF MAXIMUM DEMAND

The display of maximum demand in kVA/MVA/kW/MW should have adequate resolution as per accuracy class of the active part of the meter at 20 percent of the load. In short, the display of kVA/kW should have more decimal points than the normal low resolution kWh/kVarh/kVAh display. For example, a Class 1.0 meter may have 1 decimal point kWh display, but will require at least three decimal points for kW/kVA display to record MD correctly at 20 percent of the load.

G-7 GUIDE FOR kVAh MEASUREMENT

Generally two different measurement techniques are adopted for VAh measurement, namely vector sum and arithmetic sum principles.

Vector sum volt-ampere is the vector sum of active energy and reactive energy in a 3-phase balanced load or unbalanced circuit.

Arithmetic sum volt-ampere is the arithmetical sum of the three products of line current and associated phase voltages in a three-phase balanced or unbalanced circuit.

In case of electromechanical registers, kVAh as measured by above principles, are generally different. However, for static three parameter meters having high speed microprocessor adopting kVarh computation at very high rates, the vector sum value of kVarh tends to the arithmetic sum value in limiting case. Therefore, it is suggested to consider that wherever, kVAh has appeared in this specification, it is the same as the vector sum value. Thereby, it becomes easier to check the kVAh accuracy by determining errors of kWh and kVarh meters only in terms of kWh and kVarh measurement standards.

In addition the computation error of vector sum is to be verified at a power factor common with in the ranges Cos ϕ = 0.5 lag to 1.0 and Sin ϕ = 0.5 lag to 1.0 lag (Cos ϕ = 0.866 lag to 0.00 lag). The suggested power factor is 0.5 lag or 0.866 lag. It is determined by comparing the indicated kVAh with the theoretical computed kVAh as obtained from kWh and kVarh reference meters. The allowable error limit is the vector sum of kWh and kVarh error limits. In case of three parameter meter, it becomes convenient to compute this kVAh from the kWh and kVarh readings of the meter itself.

G-8 TIME OF DAY (TOD) REGISTERS

Depending on the requirement, up to six different registers for storing energies (active/reactive/apparent) and maximum demand (active/apparent) for different real time zones (TOD's) should be available. It should be possible to redefine the time periods through the common hand held unit with proper security. The main control for this change shall be available on the computer located at the base station.

G-9 COMMUNICATION CAPABILITY

A meter irrespective of make should have facilities for data transfer by a common hand held unit (common meter reading instrument) to/from a base station with proper security via an optically isolated communication port using serial communication.

Whenever required for summation, telemetering or time synchronization purposes, required output should be provided.

G-10 TAMPER AND FRAUD MONITORING

The meter shall have the following special features of recording occurrences of abnormalities in order to monitor and to detect tamper and fraud against meter:

a) The meter should be capable of recording occurrences of a missing potential and its restoration with date and time of first such occurrences and last restoration along with total number and duration of such occurrences during the above period for all phases.

b) The meter should detect CT polarity reversal and record the same with date and time of first such occurrences and last restoration along with total number and duration of such occurrences during the above period for all phases.

c) The meters for 3-wire applications shall indicate load unbalance between the phases over and above a specified value.

NOTES

1 Abnormalities and number of occurrences other than above can be mutually agreed upon between the user and the supplier.

2 Threshold values of electrical parameters (voltage/current/power factor) and the minimum duration of such occurrences of abnormalities, are to be agreed between the user and the supplier.

3 All the above special features to monitor/detect tamper should be available even in the absence of reference

(common meter reading instrument) and down load this data into a base computer system (BCS) for generating complete details. Necessary software for this purpose shall be provided by the meter manufacturer.

G-11 DISPLAY PARAMETERS

By agreement between the manufacturer and the user, it may be possible to have:

a) Auto display cycling facility for only essential parameters (the persistence time and the total cycle time having been specified).

b) Facility for display on demand for wider range of parameters.

c) Facility for display on demand for more ranges of parameters on a common hand held unit (CMRI).

d) Facility for display of some secured parameters through BCS. When such parameters are not desirable to be displayed at site by any of the above three methods.

G-12 LOAD SURVEY CAPABILITY

The meter should be capable of storing in its non-volatile memory demand data for one or more parameters specified below periodically logged at predefined intervals as agreed by the supplier and the user:

a) kW or kVA demand import	: For all types
b) kVar import	: For bulk consumer and energy audit
c) kVar export	: For bulk consumers and energy audit
d) kW or kVA export	: For energy audit purpose or special purposes

G-13 The display for kWh, kVarh and kVAh should have facility for high resolution display to facilitate testing with desired accuracy within reasonable time. Alternatively the common meter reading instrument may have this facility of reading the high resolution register of the meter for testing purpose.

G-14 In the absence of power supply, facility for display or meter reading should be available.

G-15 While installing the meter, it should be possible to check the correctness of connections of CT, VT to the meter with proper polarity. This may be available in the display of the meter for different ways the voltages and currents are injected. For this purpose, a suitable software for field diagnosis of meter connections with the help of the meter and common meter reading instrument should be supplied.

G-16 In view of varying nature of requirement of various utilities regarding registration of reactive and apparent energy at leading power factors, there should be flexibility to meet these needs satisfactorily. For example reactive energy at leading power factor may be considered as zero or may be stored in a separate register. Similarly apparent energy at leading power factor may be computed irrespective of the sign of the reactive energy or equated to the active energy when the reactive energy is considered as zero.

G-17 All the registers and other parameters shall be updated every second.

G-18 TIME ACCURACY

In the case of meters provided with real time clock, facility for adjustment of real time should be provided through common meter reading instrument with proper security.

The uncertainty of setting initial time shall not be more than ± 30 seconds from the Indian Standard time as maintained by NPL, New Delhi.

The maximum drift per annum permissible in the real time clock shall be as follows:

0.2 S	0.5 S
± 2 minutes	± 5 minutes

G-19 SELF DIAGNOSTIC FEATURE

The meter shall have indications for unsatisfactory/ non-functioning of the following:

a) Time and date, and

b) All display segments.

G-20 MEASUREMENT OF HARMONIC ENERGY/PHASE CURRENT

The meter shall be capable of measuring 50 Hz energy and total energy (consisting of 50 Hz energy and harmonic energy).

The capacity of measuring harmonic power depends on the sampling rate, the order of which should be agreed upon by the user and the supplier. Since the load has over-whelming contribution to harmonic power, as confirmed by analysis of various types of sources/loads, it shall be sufficient for the user to determine the accuracy of current measurement under the presence of harmonic of 30 percent total harmonics distortion (THD), commensurate with the accuracy class of the active part of the meter.

The display of various phase currents shall, therefore, be made (may be with the help of external meter reading device) and shall be provided with necessary resolution.

The requirements specified here are to be mutually agreed between user and supplier.

(*Continued from second cover*)

Technical Report No. 88 'Specification for ac static electrical energy meters', issued by Central Board of Irrigation and Power (CBIP), New Delhi. First Revision, 1996.

Regarding test output the recommendation of CBIP Technical Report No. 88 first revision, 1996, has been adopted in this standard in view of various approved devices prevailing in the country.

The recommendations for additional requirement for multi parameter ac static energy metres for specific applications are given in Annex G.

For the purpose of deciding whether a particular requirement of this standard is complied with, the final value, observed or calculated, expressing the result of a test, shall be rounded off in accordance with IS 2 : 1960 'Rules for rounding off numerical values (*revised*)'. The number of significant places retained in the rounded off value should be the same as that of the specified value in this standard.

Bureau of Indian Standards

BIS is a statutory institution established under the *Bureau of Indian Standards Act*, 1986 to promote harmonious development of the activities of stardardization, marking and quality certification of goods and attending to connected matters in the country.

Review of Indian Standards

Amendments are issued to standards as the need arises on the basis of comments. Standards are also reviewed periodically; a standard along with amendments is reaffirmed when such review indicates that no changes are needed; if the review indicates that changes are needed, it is taken up for revision. Users of Indian Standards should ascertain that they are in possession of the latest amendments or edition by referring to the latest issue of 'BIS Handbook' and 'Standards: Monthly Additions'.

This Indian Standard has been developed from Doc: No. ETD 13 (5026).

Amendments Issued Since Publication

Amend No.	Date of Issue	Text Affected

BUREAU OF INDIAN STANDARDS

Headquarters:

Manak Bhavan, 9 Bahadur Shah Zafar Marg, New Delhi 110002
Telephones: 323 01 31, 323 3375, 323 94 02

Telegrams: Manaksanstha
(Common to all offices)

Regional Offices:		Telephone
Central	: Manak Bhavan, 9 Bahadur Shah Zafar Marg NEW DELHI 110002	323 76 17, 323 38 41
Eastern	: 1/14 C.I.T. Scheme VII M, V.I.P. Road, Kankurgachi CALCUTTA 700054	337 84 99, 337 85 61 337 86 26, 337 91 20
Northern	: SCO 335-336, Sector 34-A, CHANDIGARH 160022	60 38 43 60 20 25
Southern	: C.I.T. Campus, IV Cross Road, CHENNAI 600113	235 02 16, 235 04 42 235 15 19, 235 23 15
Western	: Manakalaya, E9 MIDC, Marol, Andheri (East) MUMBAI 400093	832 92 95, 832 78 58 832 78 91, 832 78 92
Branches	: AHMADABAD. BANGALORE. BHOPAL. BHUBANESHWAR. COIMBATORE. FARIDABAD. GHAZIABAD. GUWAHATI. HYDERABAD. JAIPUR. KANPUR. LUCKNOW. NAGPUR. PATNA. PUNE. RAJKOT. THIRUVANANTHAPURAM.	

Printed at Simco Printing Press, Delhi

AMENDMENT NO. 1 OCTOBER 2003

TO

IS 14697 : 1999 ac STATIC TRANSFORMER OPERATED WATTHOUR AND VAR-HOUR METERS, CLASS 0.2 S AND 0.5 S — SPECIFICATION

(*First cover page and page* 1, *Title*) — Substitute the following for the existing:

'ac STATIC TRANSFORMER OPERATED WATTHOUR METERS (CLASS 0.2 S AND 0.5 S) AND VAR-HOUR METERS (CLASS 0.2 S, 0.5 S AND 1.0 S) — SPECIFICATION'

(*Second cover page, Foreword, para* 3, *line* 2) — Insert 'and 1.0 S' after 'class 0.5 S'.

(*Second cover page, Foreword, paragraph* 4, *line* 4) — Substitute 'watthour meters of class 0.2 S and 0.5 S and Var-hour meters of class 0.2 S, 0.5 S and 1.0 S' *for* 'watthour and Var-hour meters of class 0.2 S and 0.5 S'

(*Second cover page, Foreword, para* 5, *last sentence*) — Substitute the following for the existing:

"For applications *see* IS : 11448 : 2000 'Application guide for ac electricity meters'."

(*Second cover page, Foreword, para* 6, *lines* 4 *and* 5) — Substitute 'IS 13010 : 2002' *for* 'IS 13010 : 1990' and 'IS 13779 : 1999' *for* 'IS 13779 : 1993'.

(*Page* 1, *clause* **1.3**, *lines* 11 *and* 12) — Substitute 'class 0.2 S, 0.5 S and 1.0 S' *for* 'class 0.2 S and 0.5 S'.

(*Page* 5, *clause* **4.1**, *line* 2) — Insert the following after '0.2 S or 0.5 S':

'(active energy) and 0.2 S, 0.5 S or 1.0 S (reactive energy)'

(*Page* 8, *clause* **7.1**) — Insert the following paragraph at the end of the clause:

'For multi energy meters, the class indices of all the energy parameters, if different, shall be separately indicated. In the absence of this, the meter shall be regarded to have the same class index for all energy parameters.'

(*Page* 8, *Table* 3, *col* 3) — Substitute '$3 \times 110/\sqrt{3}$ V' or '3×63.5 V' *for* '$3 \times 110\sqrt{3}$ '.

(*Page* 8, *clause* **7.2**) — Insert the following at the end of the clause:

'Standard connection diagrams are shown in Annex H.'

(*Page* 8, *Table* 4) — Substitute '-10°C to + 55°C' *for* '0°C to + 55°C', '-25°C to + 60°C' *for* '-10°C to + 60°C' and '-25°C to + 70°C' *for* '-10°C to + 70°C'.

(*Page* 8, *Table* 6) — Substitute the following for the existing:

Table 6 Power Consumption in Voltage Circuit Including the Power Supply

(*Clause* 9.1.1)

Meters	Class of Meters (0.2 S, 0.5 S and 1.0 S)
(1)	(2)
Single-phase and polyphase (per phase)	1.5 W and 10 VA

Price Group 6

(*Page* 8, *Table* 7) — Substitute the following for the existing:

Table 7 Apparent Power Consumption in Current Circuit

(*Clause* 9.1.2)

Meters	Class of Meters (0.2 S, 0.5 S and 1.0 S)
(1)	(2)
Single-phase and polyphase (per phase)	1.0 VA

(*Page* 9, *Table* 9) — Substitute the following for the existing:

Table 9 Variations Due to Short-time Over Currents

(*Clause* 9.2.3)

Value of Current	Power Factor	Limits of Variation in Percentage Error for Meters of Class		
		0.2 S	0.5 S	1.0 S
(1)	(2)	(3)	(4)	(5)
I_b	1	0.1	0.1	0.1

(*Page* 9, *Table* 10) — Substitute the following for the existing:

Table 10 Variation in Percentage Error Due to Self-Heating

(*Clause* 9.3)

Value of Current	Power Factor	Limits of Variation in Percentage Error for Meters of Class		
		0.2 S	0.5 S	1.0 S
(1)	(2)	(3)	(4)	(5)
I_{Max}	1	0.1	0.2	0.5
I_{Max}	0.5 lagging	0.1	0.2	0.7

(*Page* 9, *clause* **9.5**) — Insert the following new clause:

'9.6 Immunity to Earth/Phase Fault

This test applies to three-phase four-wire meters.

During a test under a simulated earth/phase fault condition in one/two of the three lines, all voltages are increased to 1.1 times the nominal voltages during 4 h. The neutral terminal of the meter under test is disconnected from the ground terminal of the meter test equipment (MTE) and is connected to the MTE's line at which the earth/phase fault has to be simulated (*see Annex* J).

In this way the two voltage terminals of the meter under test which are not affected by the earth/phase fault are connected to 1.9 times the nominal phase voltages. During this test the current circuits are set to 50 percent of the rated I_b, unity power factor and symmetrical load. After the test, the meter shall show no damage and shall operate correctly.

The change of error measured when the meter is back at nominal working temperature shall not exceed the limits given in Table 10A.

For testing, *see* **12.17**.

Table 10A Change of Error Due to Earth/Phase Fault

(*Clause* 9.6)

Value of Current	Power Factor	Limits of Variation in Percentage Error for Meters of Class		
		0.2 S	0.5 S	1.0 S
(1)	(2)	(3)	(4)	(5)
I_b	1	0.2	0.4	0.7

(*Page* 10, *Table* 11) — Substitute the following for the existing:

Table 11 Percentage Error Limits (Single-Phase Meters and Polyphase Meters with Balanced Loads)

(*Clause* 11.1)

Value of Current	Power Factor	Percentage Error Limits for Meters of Class		
		0.2 S	0.5 S	1.0 S
(1)	(2)	(3)	(4)	(5)
$0.01\ I_b \leq I_b < 0.05\ I_b$	1	± 0.4	± 1.0	–
$0.05\ I_b \leq I_b \leq I_{Max}$	1	± 0.2	± 0.5	± 1.0
$0.02\ I_b \leq I_b < 0.1\ I_b$	0.5 lagging	± 0.5	± 1.0	± 2.0
	0.8 lagging	± 0.5	± 1.0	± 2.0
$0.1\ I_b \leq I_b \leq I_{Max}$	0.5 lagging	± 0.3	± 0.6	± 1.2
	0.8 lagging	± 0.3	± 0.6	± 1.2
When specially required by the user: from $0.2\ I_b$ to I_b	0.25 lagging	± 0.5	± 1.0	± 2.5
	0.5 lagging	± 0.5	± 1.0	± 2.5

(*Page* 10, *Table* 12) — Substitute the following for the existing:

Table 12 Percentage Error Limits (Polyphase Meters Carrying a Single-Phase Load but with Balanced Polyphase Voltages Applied to Voltage Circuits)

(*Clause* 11.1)

Value of Current	Power Factor of Relevant Element	Percentage Error Limits for Meters of Class		
		0.2 S	0.5 S	1.0 S
(1)	(2)	(3)	(4)	(5)
$0.05\ I_b \leq I_b < I_{Max}$	1	± 0.3	± 0.6	± 1.5
$0.1\ I_b \leq I_b \leq I_{Max}$	0.5 lagging	±0.4	±1.0	± 2.0

(*Page* 10, *para below Table* 12, *lines* 5 *and* 6) — Substitute 'shall not exceed 0.4, 0.8 and 1.5 for meters of classes 0.2 S, 0.5 S and 1.0 S respectively.' *for* 'shall not exceed 0.4, and 0.8 for meters of classes 0.2 S and 0.5 S respectively'.

(*Page* 10, *Table* 13) — Substitute the following for the existing:

Table 13 Influence Quantities

(*Clauses* 9.2.1 *and* 11.2)

Influence Quantities	Value for Current (Balanced Unless Otherwise Stated)	Power Factor	Limit of Percentage Error for Meters of Class		
			0.2 S	0.5 S	1.0 S
(1)	(2)	(3)	(4)	(5)	(6)
Voltage variation (*see* Note 1) ± 10%	$0.02\ I_b \le I_b \le I_{Max}$	1	0.1	0.2	0.4
	$0.05\ I_b \le I_b \le I_{Max}$	0.5 lagging	0.2	0.4	0.8
Frequency variation ± 5%	$0.02\ I_b \le I_b \le I_{Max}$	1	0.1	0.2	0.4
	$0.05\ I_b \le I_b \le I_{Max}$	0.5 lagging	0.1	0.2	0.4
Waveform : 10% of 3rd harmonic in the current (*see* Note 2)	$0.05\ I_b \le I_b \le I_{Max}$	1	0.1	0.1	0.2
Reversed phase sequence (*see* Note 3)	$0.1\ I_b$	1	0.05	0.1	0.2
Voltage unbalance (*see* Note 4)	I_b	1	0.5	1.0	2.0
Auxiliary voltage ± 15% (*see* Note 5)	$0.02\ I_b$	1	0.05	0.1	0.2
Phase of auxiliary supply voltage by 120 degree (*see* Note 5)	$0.02\ I_b$	1	0.1	0.2	0.4
Continuous magnetic induction of external origin (*see* Note 6)	I_b	1	2.0	3.0	3.0
Magnetic induction of external origin 0.5 mT (*see* Note 7)	I_b	1	05	1.0	2.0
Electromagnetic HF fields (*see* Note 8)	I_b	1	1.0	2.0	2.0
Operation of accessories (*see* Note 9)	$0.02\ I_b$	1	0.05[1)]	0.1	0.2
Continuous abnormal magnetic induction of external origin (*see* Note 10)	I_b	1	4.0	4.0	4.0

[1)] With due cognizance of uncertainty of measurement.

NOTES

1 For the voltage ranges from –20 to –10 percent and +10 to +20 percent the limits of variation in percentage error are three times the values given in Table 13.

Below 0.8 Vref and up to 0.7 Vref, the said limits are five times the value given in Table 13.

Below 0.7 Vref the error of the meter may vary between +10 percent and -100 percent.

2 The distortion factor of the voltage shall be less than 1 percent. The variation in percentage error shall be measured under two conditions. The peak of third harmonic in the first measurement in phase and in the second measurement in antiphase of the peaks of the fundamental current. For polyphase meters, the voltage circuit shall be energized in parallel and the current circuit in series.

3 Applicable for active energy meter only.

4 The polyphase meter shall measure and register within the variation in percentage error limits shown in Table 13 if one or two-phase of the 3-phase network are interrupted, provided the reference phase is available, that is, Y-phase for three-phase 3-wire meters and neutral for 3-phase 4-wire meters. However, the operation of the meter shall not be affected by such removal of reference phase. Applicable for active energy meters only.

5 Applicable only if the auxiliary supply voltage is not internally connected to the voltage measuring circuit.

6 The test conditions are specified in **12.10**.

7 A magnetic induction of external origin of 0.5 mT produced by a current of the same frequency as that of the voltage applied to the meter and under the most unfavourable conditions of phase and direction shall not cause a variation in the percentage error of the meter exceeding the values shown in Table 13. The test conditions are specified in **12.10**.

8 The test conditions are specified in **12.8.3**.

9 Such an accessory, enclosed in the meter case is energized intermittently, for example, the electromagnet of a multirate register.

10 The test conditions are specified in **12.11**.

(*Page* 11, *Table* 14) — Substitute the following for the existing:

Table 14 Temperature Co-efficient

(*Clause* 11.3)

Value of Current	Power Factor	Mean Temperature Coefficient for Meter of Class		
		0.2 S	0.5 S	1.0 S
(1)	(2)	(3)	(4)	(5)
From 0.05 I_b to I_{Max}	1	0.01	0.03	0.05
From 0.1 I_b to I_{Max}	0.5 lagging	0.02	0.05	0.07

(*Page* 11, *Table* 15) — Substitute the following for the existing:

Table 15 Starting Currents

(*Clause* 11.5)

Value of Current	Power Factor	Class of Meter		
		0.2 S	0.5 S	1.0 S
(1)	(2)	(3)	(4)	(5)
Percentage of I_b	1	0.1	0.1	0.2

(*Page* 11, *clause* 11.7, *line* 2) — Substitute 'not exceed 0.1 for class 0.2 S, 0.25 for class 0.5 S and 0.5 for class 1.0 S.' *for* 'not exceed 0.1 for class 0.2 S and 0.25 for class 0.5 S'

(*Page* 12, *Table* 16) — Insert the following after Sl No. 3.5:

Sl No.	Test	Clause Reference	A	R
(1)	(2)	(3)	(4)	(5)
3.6	Test of immunity to earth/phase fault	12.17		

(*Page* 16, *clause* 12.8.4) — Substitute the following for the existing:

'**12.8.4** *Fast Transient Burst Test*

'The test shall be carried out according to IS 14700 (Part 4/Sec 4) : 1999/IEC 61000-4-4, under the following conditions:

a) Without any current in the current circuit and current terminals shall be open circuit.
Meter in operating condition
- voltage and auxiliary circuits energized with reference voltage;
- test voltage on the current and voltage circuit: 4kV
- duration of the test: 60 s
- tested as table-top equipment

b) With basic current I_b and power factor equal to 1.
- voltage and auxiliary circuits energized with reference voltage
- test voltage on the current and voltage circuit: 2 kV
- test voltage on the auxiliary circuits with a reference voltage over 40 V: 1 kV
- duration of the test: a fast transient burst of 1s commences the test, followed by a 300 s non-active period. The test cycle is then repeated until a minimum test time of 10 min has been completed (the actual test time will depend on the resolution of the meter register; a resolution of at least 0.2%, 0.3% and 0.4% is required for 0.2 S, 0.5 S and 1.0 S respectively)
- tested as table-top equipment

The test voltage shall be applied between:

the terminals of each circuit normally connected to mains; any two independent circuits having reference voltage over 40 V and each independent circuits having reference voltage over 40 V and earth.

The qualifying conditions for the tests are:

a) In case of (a) above: during the test, there shall not be a change in the register of more than 0.001 kWh and the test output shall not produce a signal equivalent to more than 0.001 kWh. These values are based on the rated current of 5 A and reference voltage 100 V of the meter. For other voltage and current ratings the value 0.001 kWh has to be converted accordingly.

b) In case of (b) above: the advancement in registration during this test shall not vary by more than 2%, 3%, or 4% for meters of class 0.2 S, 0.5 S, and 1.0 S respectively from a test under the same load conditions without application of the transients.'

(*Page* 17, *Table* 19) — Substitute the following for the existing:

Table 19 Voltage and Current Balance

(*Clause* 12.9.1)

Polyphase Meters	Class of Meters		
	0.2 S	0.5 S	1.0 S
(1)	(2)	(3)	(4)
Each of the voltages between line and neutral or between any two lines shall not differ from the average corresponding voltage by more than	± 1%	± 1%	± 1%
Each of the currents in the current circuit shall not differ from the average current by more than	± 1%	± 1%	± 2%
The phase displacements of these currents from the corresponding line to neutral voltage, irrespective of the power factor, shall not differ from each other by more than	2 degree	2 degree	2 degree

(*Page* 17, *Table* 20) — Substitute the following for the existing:

Table 20 Reference Conditions

(*Clauses* 12.9.1 *and* 12.10)

Influence Quantity	Reference Value	Permissible Tolerance	
		0.2 S and 0.5 S	1.0 S
(1)	(2)	(3)	(4)
Ambient temperature (*see* Note 1)	Reference temperature or in its absence 27°C	± 2°C	± 2 °C
Voltage	Reference voltage (*see* Note 3)	± 1%	± 1%
Frequency	Reference frequency (*see* Note 3)	± 0.3%	± 0.5%
Waveform	Sinusoidal voltage and current	Distortion factor less than 2%	Distortion factor less than 2%
Magnetic induction of external origin at the reference frequency	Magnetic induction equal to zero (*see* Note 4)	Induction value which causes a variation of error not greater than 0.1% (0.2 S) and 0.2% (0.5 S), but in any case should not be greater than 0.05 mT (*see* Note 2)	0.05 mT

NOTES

1 If the tests are made at a temperature other than the reference temperature, including permissible tolerances, the results shall be corrected by applying the appropriate temperature coefficient of the meter.

2 The test consists of :

a) For a single-phase meter, determining the errors at first with the meter normally connected to the mains and then after inverting the conditions to current circuits as well as to the voltage circuits. Half of the difference between the two errors is the value of the variation of error. Because of the unknown phase of the external field, the test has to be made at 0.1 I_b at unity power factor and 0.2 I_b at 0.5 lag power factor.

b) For a three-phase meter making three measurements at 0.1 I_b at unity power factor after each of which the connections to the current circuits and voltage circuits are changed over 120° while the phase sequences is not altered. The greatest difference between each of the errors so determined and their average value is the value of the variation of error.

3 The reference conditions for voltage and frequency apply to both the measuring circuit and the auxiliary supply(ies).

4 This magnetic induction is that at the place of test without the presence of the meter and its connections.

(*Page* 17, *clause* **12.10**, *para* 1) — Substitute the following for the existing text:

'It shall be verified that the requirements of influence quantities as fixed under **11.1** and **11.2** are satisfied. Test for variation caused by a particular influence quantity should be performed independently with all other influence quantities at their reference conditions (*see* Table 20).

The continuous magnetic induction of 67 milli Tesla ± 5% (*see* Note 6 under Table 13) shall be obtained at a distance of 5 mm from the surface of the pole, by using the electromagnet according to Annex G energised with a dc current . The magnetic field shall be applied to all surfaces of the meter. The value of the magneto-motive force to be applied shall generally be 1 000 ampere turns.'

(*Page* 18, *clause* **12.10**) — Insert the following text at the end of the clause:

'The continuous 'abnormal' magnetic induction of 0.2 Tesla ± 5% (*see* Note 10 under Table 13) shall be obtained at a distance of 5 mm from the surface of the pole, by using the electromagnet according to Annex G energized with a dc current. The magnetic field shall be applied to all surfaces of the meter. The value of the magneto-motive force to be applied shall generally be 10 000 ampere turns.'

(*Page* 18, *Table* 21) — Substitute the following for the existing:

Table 21 Interpretation of Test Results

(*Clauses* 11.1 *and* 12.15)

	Class of Meters		
	0.2 S	0.5 S	1.0 S
(1)	(2)	(3)	(4)
Permissible displacement of the zero line, percent	0.1	0.2	0.5

(*Page* 18, *clause* **12.16**) — Insert the following new clause:

'12.17 Test of Immunity to Earth/Phase Fault'

It shall be verified that the earth/phase fault requirements as fixed under **9.6** are satisfied. For test diagram, *see* Annex J.'

(*Page* 19, *Annex* A) — Substitute 'IS 12346 : 1999 Testing equipment for electrical energy meters (*first revision*)' *for* 'IS 12346 : 1988' and 'IS 13779 : 1999 ac Static watthour meters, class 1and 2 — Specification (*first revision*)' *for* 'IS 13779 : 1993'.

(*Page* 21, *Annex* D) — Substitute the following for the existing figure:

ANNEX D

(*Clause* 12.10)

ELECTROMAGNET FOR TESTING THE INFLUENCE OF EXTERNALLY-PRODUCED MAGNETIC FIELD

(All dimensions in millimeters)

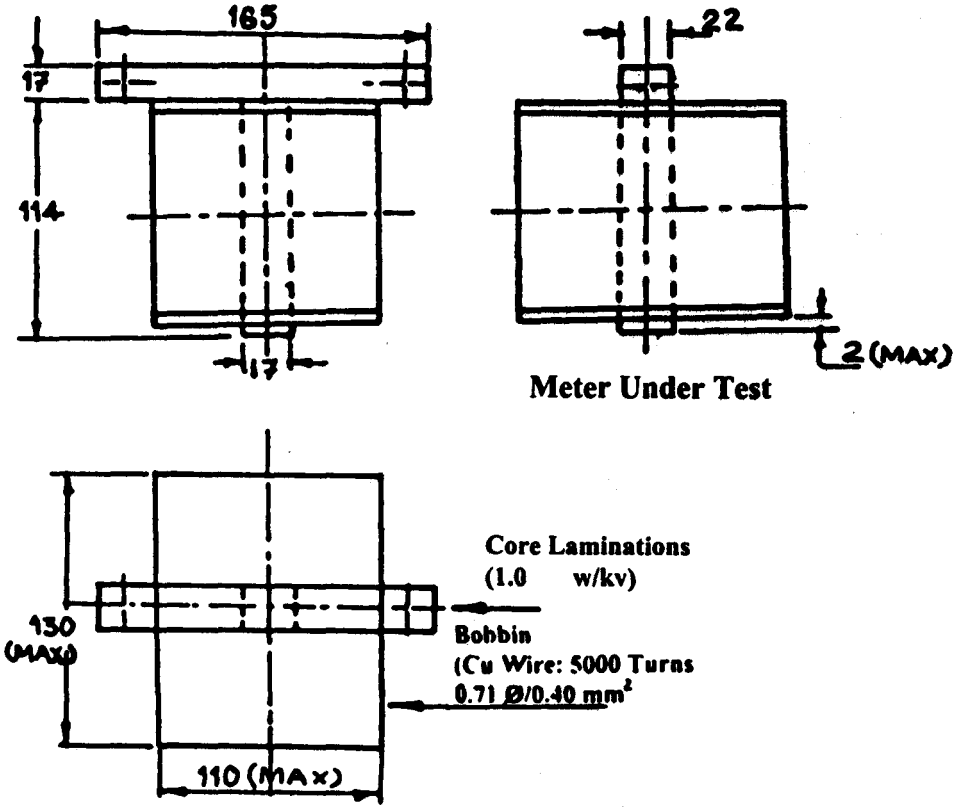

(*Page* 25, *Annex G, clause* G-7, *para* 4, *line* 1) — Substitute 'electromechanical meters' *for* 'electromechanical registers'.

(*Page* 25, *Annex G, clause* G-7, *para* 4, *lines* 4 *and* 5) — Substitute 'kVAh' *for* 'kVArh'.

(*Page* 25, *Annex G, clause* G-10) — Insert the following paragraph at the end of G-10(c):

'd) The meter shall record the occurrence and restoration of conditions of abnormal magnetic field in its vicinity.'

(*Page* 26) — Insert the following '*Annex* J' after '*Annex* H' :

ANNEX J

(*Clauses* 9.6 *and* 12.17)

TEST CIRCUIT DIAGRAM FOR THE TEST OF IMMUNITY TO EARTH/PHASE FAULT

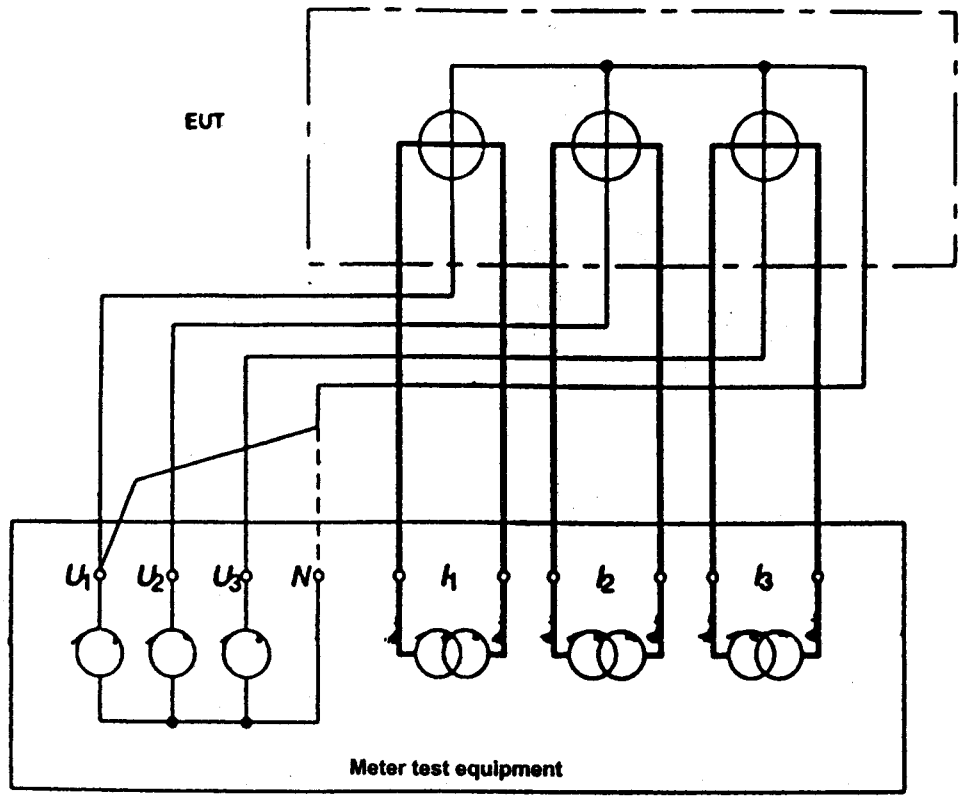

Circuit to simulate earth fault condition in phase 1.

Voltage at the meter under test

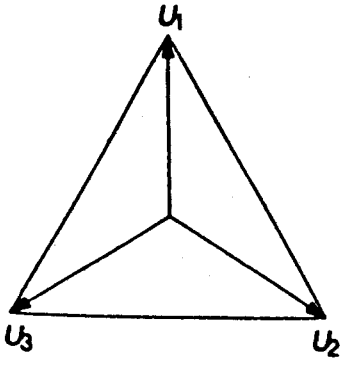

Normal condition

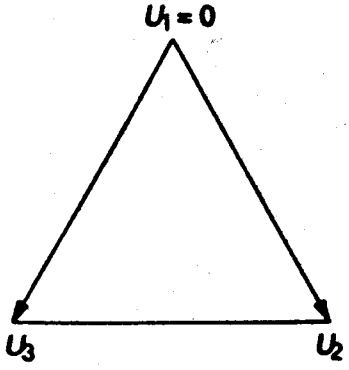

Earth fault condition

(*Page* 26) — Insert the following '*Annex* H' after '*Annex* G' :

ANNEX H

(*Clause* 7.2)

STANDARD CONNECTION DIAGRAMS

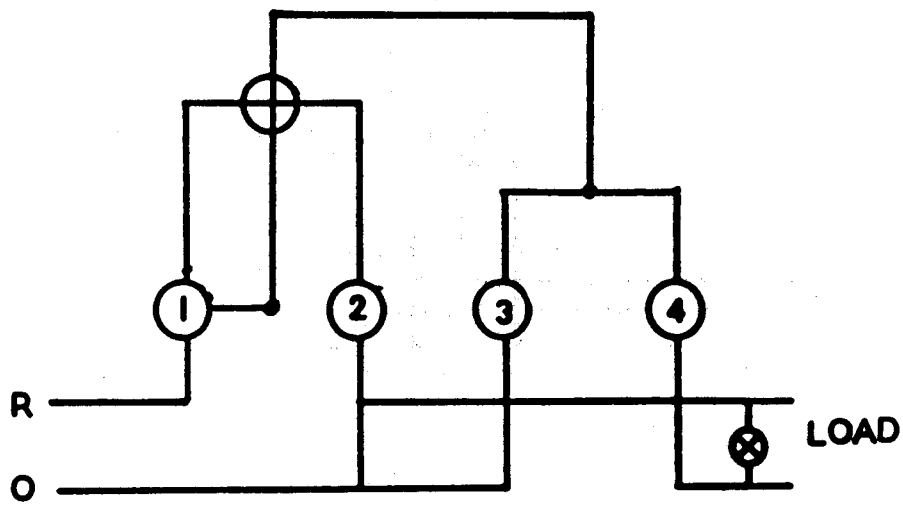

FIG. A

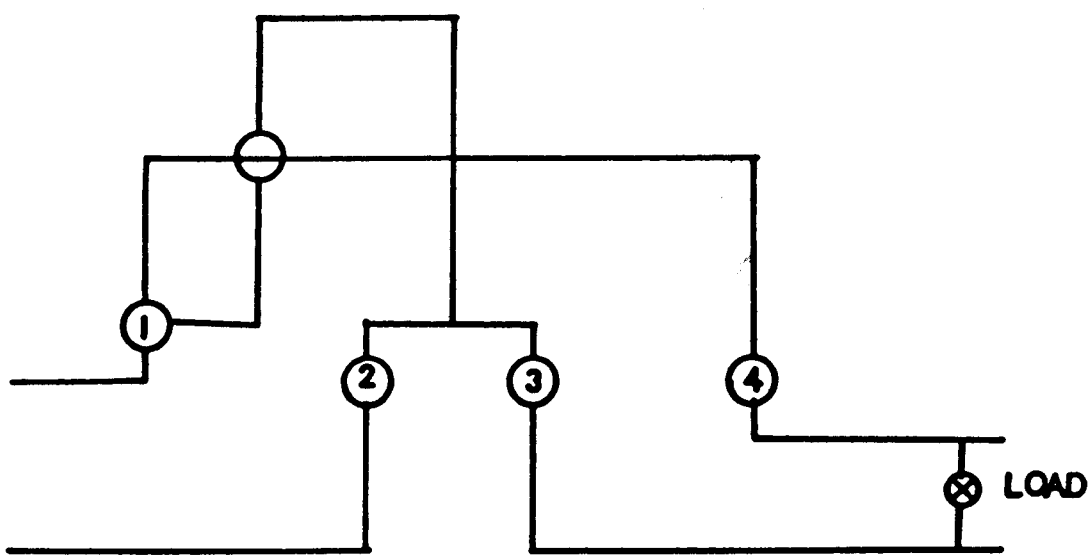

FIG. B

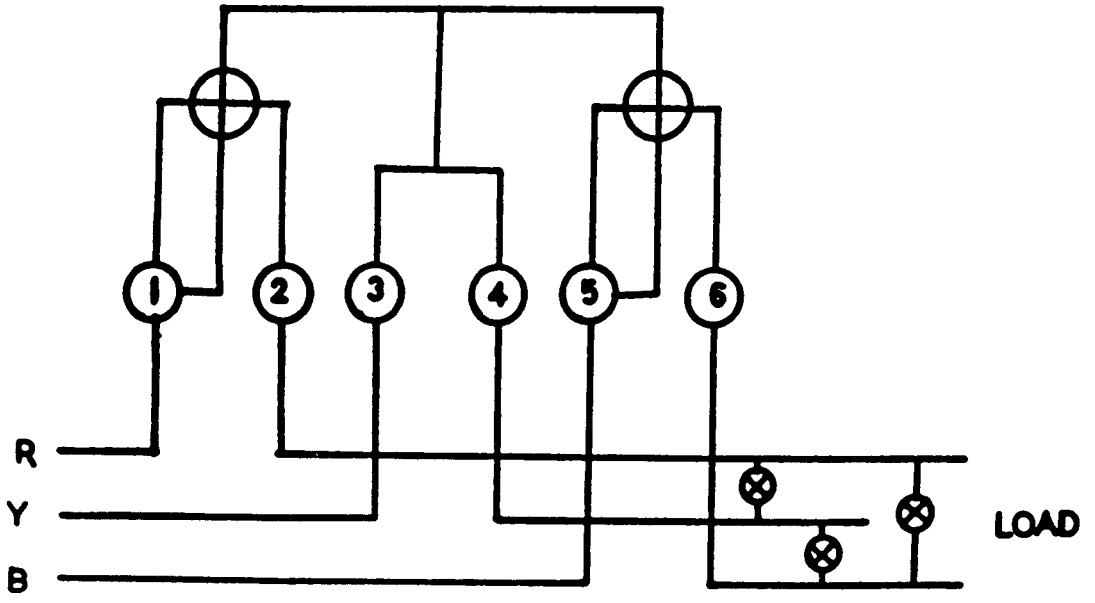

FIG. C

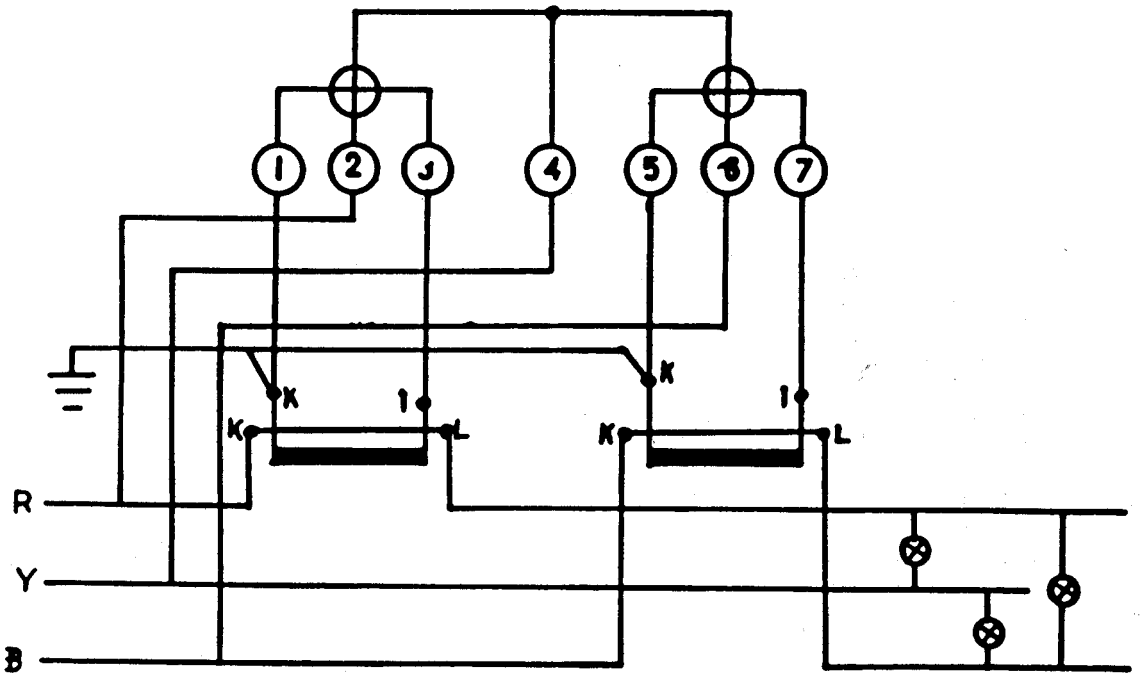

FIG. D

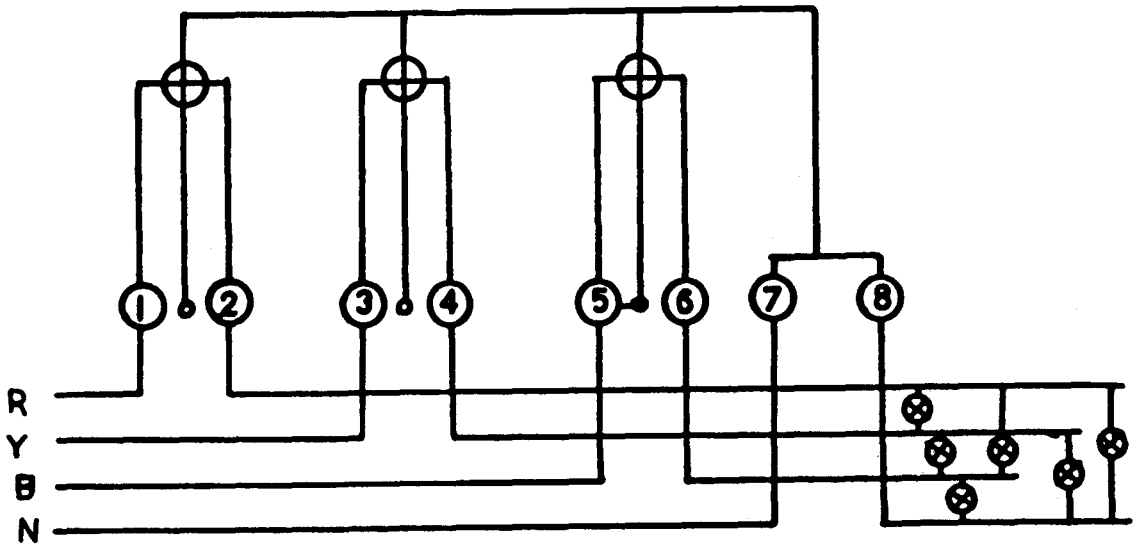

FIG. E

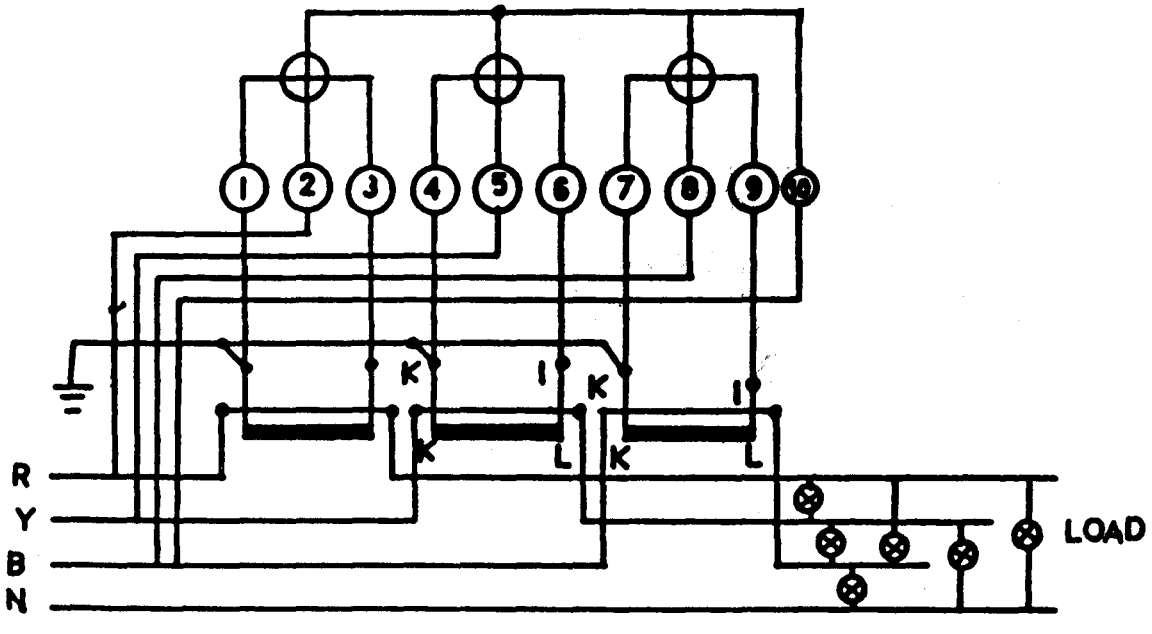

FIG. F

(ET 13)

Reprography Unit, BIS, New Delhi, India

AMENDMENT NO. 2 OCTOBER 2004
TO
IS 14697 : 1999 ac STATIC TRANSFORMER OPERATED WATTHOUR AND VAR-HOUR METERS, CLASS 0.2 S AND 0.5 S — SPECIFICATION

(*Page* 5, *clause* **6.2**, *first sentence*) — Substitute the following for the existing:

'The meter shall have a reasonably dust/moisture-proof case, which shall be sealed by the manufacturer in such a way that the internal parts of the meter are accessible only after breaking such distinctive seal(s)'.

(ET 13)

Reprography Unit, BIS, New Delhi, India

AMENDMENT NO. 3 DECEMBER 2004
TO
IS 14697 : 1999 ac STATIC TRANSFORMER OPERATED WATTHOUR AND VAR-HOUR METERS, CLASS 0.2 S AND 0.5 S — SPECIFICATION

[*First cover page and page* 1, *Title* (*see also Amendment No.* 1)] — Substitute the following for the existing:

'ac STATIC TRANSFORMER OPERATED WATTHOUR AND VAR-HOUR METERS, CLASS 0.2 S, 0.5 S AND 1.0 S — SPECIFICATION'

[*Second cover page, Foreword, paragraph* 4, *line* 4 (*see also Amendment No.* 1)] — Substitute 'watthour and Var-hour meters of class 0.2 S, 0.5 S and 1.0 S' *for* 'watthour meters of class 0.2 S and 0.5 S and Var-hour meters of class 0.2 S, 0.5 S and 1.0 S'.

(*Page* 1, *clause* **1.1**, *first sentence*) — Substitute '0.2 S, 0.5 S and 1.0 S' *for* '0.2 S and 0.5 S'.

(*Page* 1, *clause* **1.3**, *third sentence*) — Substitute '0.2 S, 0.5 S and 1.0 S' *for* '0.2 S and 0.5 S'.

[*Page* 1, *clause* **1.4**(c)] — Delete and renumber 'd)' as 'c)'.

(*Page* 5, *clause* **5.3**) — Substitute '1.2, 1.5 or 2 times' *for* '1.2 times'.

(*Page* 5, *clause* **6.4**, *paragraph* 2, *first sentence*) — Delete.

(*Page* 8, *clause* **7.2**, *Title*) — Substitute **'Connections, Diagrams and Terminal Marking'** for the existing.

(*Page* 8, *clause* **7.2**) — Add new paragraph as follows:

'When a number of meters are connected to a single distributing mains for registering electricity supplied to different consumer loads, separate service lines-phase(s) and neutral, shall be used for each meter. Moreover, interconnection of phases or neutrals of such loads connected to different meters must be avoided. Each independently metered consumer load must be directly connected to distributing mains through its meter connected in specified phase sequence so as to meet accuracy requirements of this standard.

Standard diagrams of connection are given in Annex H.'

[*Page* 8, *Table* 6 (*see also page* 1 *of Amendment No.* 1)] — Add the following notes at the bottom of the table:

'NOTES

1 The above figures are mean values. Switching power supplies with peak values in excess of these are permitted, but attention should be paid to the rating of associated voltage transformers.

2 In case additional features like remote metering, prepayment metering, etc, are built into the meter, then additional loss may be allowed as agreed between the supplier and the purchaser.'

(*Page* 10, *clause* **11.2**, *Title*) — Substitute the following for the existing:

'Limits of Error due to Other Influence Quantities'

[*Page* 10, *Table* 11, *col* 2, *row* 4 (*see also Amendment No.* 1)] — Substitute '0.8 leading' *for* '0.8 lagging'.

[*Page* 10, *Table* 11, *col* 2, *row* 6 (*see also Amendment No.* 1)] — Substitute '0.8 leading' *for* '0.8 lagging'.

[*Page* 10, *Table* 11, *col* 2, *row* 8 (*see also Amendment No.* 1)] — Substitute '0.5 leading' *for* '0.5 lagging'.

[*Page* 10, *Table* 13, *col* 1, *row* 4 (*see also Amendment No.* 1)] — Delete '(*see* Note 3)'.

[*Page* 10, *Table* 13, *Note* 3 (*see also Amendment No.* 1)] — Delete.

[*Page* 10, *Table* 13, (*see also Amendment No.* 1)] — Add the following row at the end of the table:

(1)	(2)	(3)	(4)	(5)	(6)
'Abnormal' ac magnetic induction of external origin (10 mT) (*see* Note 10)	I_b	1	4.0	4.0	4.0

[*Page*10, *Table* 13, *Note* 10 (*see also Amendment No.* 1)] — Substitute the following for the existing:

'10 The test conditions are specified in clause **12.10.** In the event of logging of abnormal magnetic induction with date and time, the positive variation may be beyond the limit of 4 percent, but not exceeding a power value equivalent to the product of rated voltage and maximum current.'

Price Group 2

[*Page* 18, *clause* **12.10**, *para* 2 (*see also Amendment No.* 1)] — Substitute 'Annex D' *for* 'Annex G'.

[*Page* 18, *clause* **12.10**, *last para, first sentence* (*see also Amendment No.* 1)] — Substitute 'Annex D' *for* 'Annex G'.

[*Page* 18, *clause* **12.10** (*see also Amendment No.* 1)] — Add the following paragraph at the end of the clause:

'The abnormal ac magnetic induction of 10 mT (*see* Note 10, Table 13) shall be obtained by placing the meter at various orientation in the center of a circular coil of square section (O.D. 400 mm, I.D. 320 mm, Depth 45 mm, 2800 AT) produced by a current of the same frequency as that of the voltage applied to the meter and under the most unfavorable conditions of phase and direction.'

[*Page* 21, *Annex* D, *figure* (*see also Amendment No.* 1)] — Substitute 'Core Lamination (1 W/kg)' *for* 'Core Lamination (1.0 w/kv)'.

(*Page* 7, *first sentence, Amendment No.* 1) — Substitute '*Page* 18' *for* '*Page* 17'.

(*Annex* J, *figure*, *Amendment No.* 1) — Substitute '$U_3 = 1.9U_n$' *for* 'U_3' and '$U_2 = 1.9U_n$' *for* 'U_2'.

[*Annex* H, *Figures* A *to* F (*see also Amendment No.* 1)] — Substitute the following for the existing:

'ANNEX H
(*Clause* 7.2)

STANDARD CONNECTION DIAGRAMS

The standard connections are given below. The phase supply terminals are generally marked as 'R', 'Y' and 'B', though other conventions are also acceptable if suitably marked on the terminal block cover. The neutral terminal is marked as 'N'. It should be noted that each individual metered connection for independent load should be given an independent set of phase and neutral connections directly from the supply side.

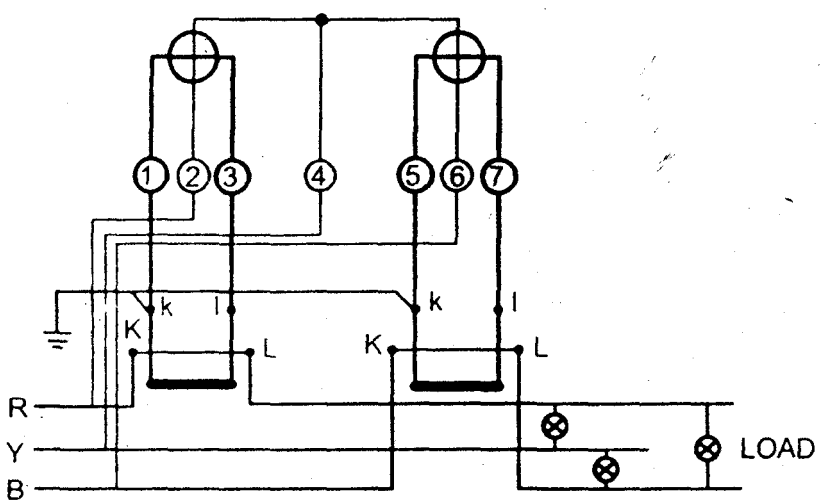

FIG. A THREE PHASE THREE WIRE METER WITH CURRENT TRANSFORMERS

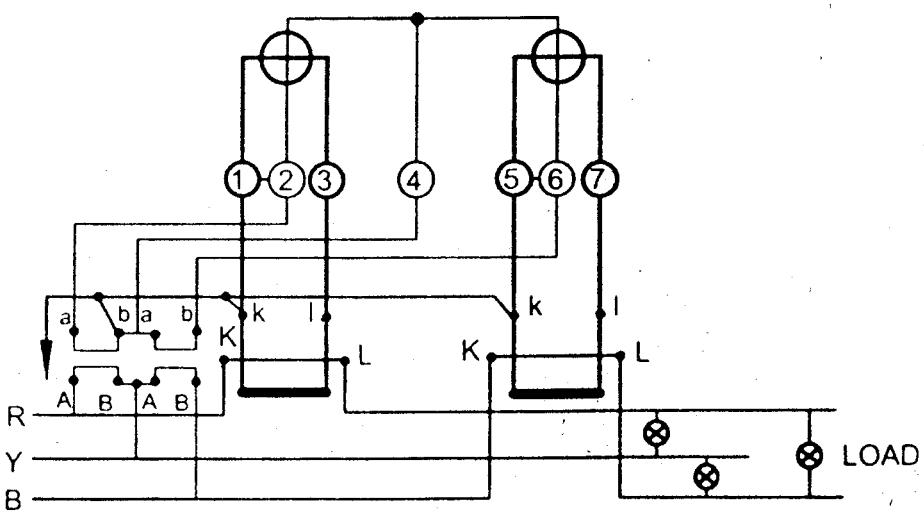

FIG. B THREE PHASE THREE WIRE METER WITH CURRENT AND VOLTAGE TRANSFORMERS

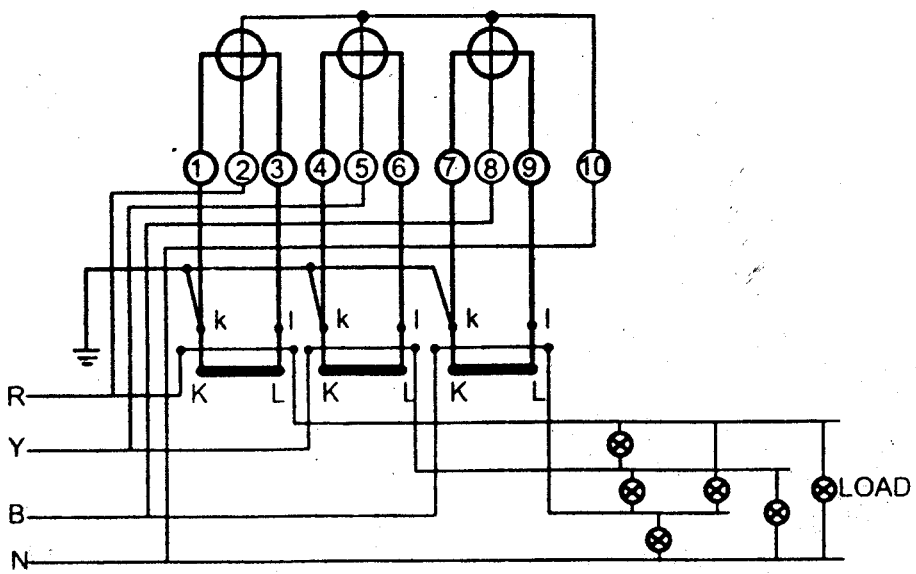

FIG. C THREE PHASE FOUR WIRE METER WITH CURRENT TRANSFORMERS

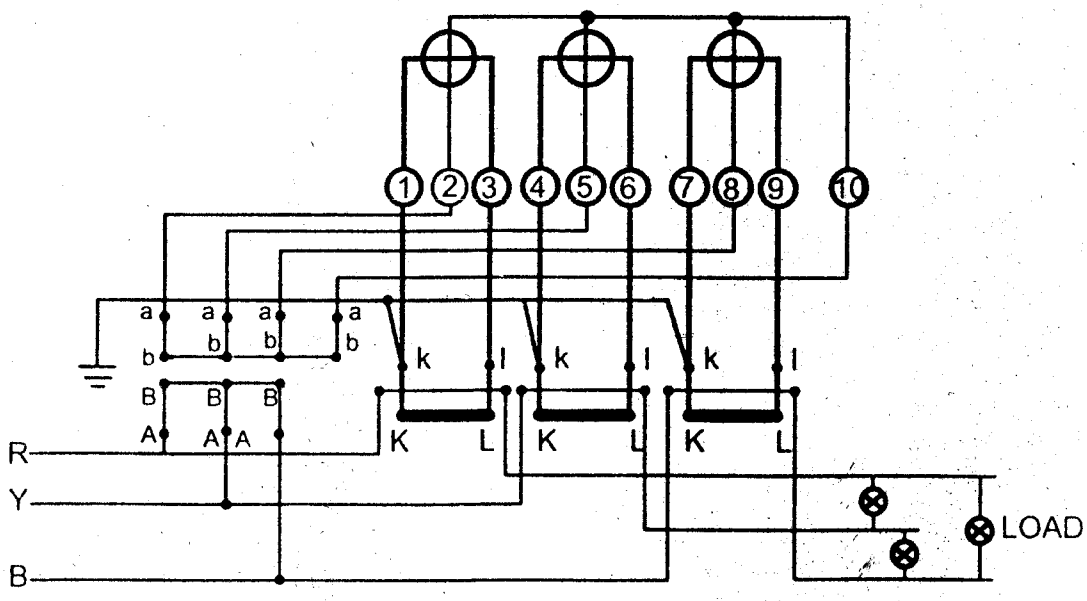

FIG. D THREE PHASE FOUR WIRE METER WITH CURRENT AND VOLTAGE TRANSFORMERS

Reprography Unit, BIS, New Delhi, India